ICE MATE 艾世铭

RHOMBIC ICEMAKER

商用小方冰制冰机

SRM-140A
SRM-175A
SRM-80A
SRM-60A
SRM-140B
SRM-175B

PARTS LIST

[CHINA]
[TAILAND]
[KOREA]
[PHILIPPINE]
[INDONESIA]

M072, M073, M080, M079, M079-C001, M079-C004 M079-C007,M080-C007,M079-C003 M122,M123

G-1 JUL. 2017
H-1 AGU. 2018
J-1 APR. 2019
K-2 DEC. 2020
M-1 OCT. 2020
N-2 JUL. 2023
R-1 SEP. 2026 (Only M079 series)

M072-4283 (0926)

制品编码 **Product Code**　规格 **Spec**

SRM-140A

M072	标准型 Standard	DESTINATION	CHINA

SRM-175A

M073	标准型 Standard	DESTINATION	CHINA

SRM-80A

M080	标准型 Standard	DESTINATION	TAILAND
M080-C007	标准型 Standard	DESTINATION	INDONESIA

SRM-60A

M079	标准型 Standard	DESTINATION	TAILAND
M079-C001	标准型 Standard	DESTINATION	KOREA
M079-C003	标准型 Standard	DESTINATION	MI
M079-C004	标准型 Standard	DESTINATION	PHILIPPINE
M079-C007	标准型 Standard	DESTINATION	INDONESIA

SRM-140B

M122	标准型 Standard	DESTINATION	PHILIPPINE

SRM-175B

M123	标准型 Standard	DESTINATION	INDONESIA

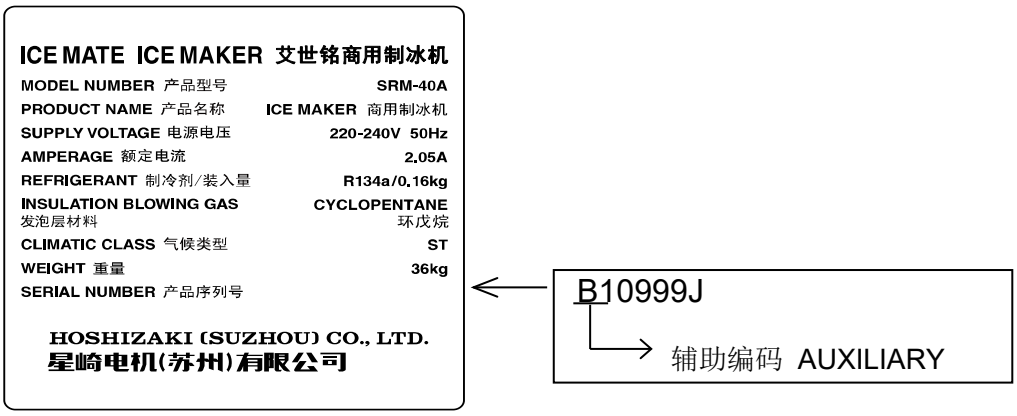

辅助编码

AUXILIARY CODE

U - 1

辅助编码序列号的前两个字符，第一个字符表示生产年份，年份是按字母顺序依次编码。
字母顺序（有时存在字母跳跃）取决于UL认证规则、生产、产品型号。
请参考铭牌标签的辅助编码和生产年份进行对应。
See the auxiliary code(s) and corresponding year(s) on the front cover.
The auxiliary code is the first two characters in the serial number. The first character indicates the production year.Years progress or regress in alphabetical order.
The series of letters and skipped letters depend on UL listing, production, and model.

第二个字符表示在同一生产年份内产品发生了显著的变化，从“1”开始，依次进行变化；
如果在1年中产品没有显著的变化，此号码从“0”开始。
The second character indicates significant part changes within the same year.

辅助编码的一般规则
MARKS LOCATED UNDER THE AUXILIARY CODE

- = 删除部品 Part deleted.

紧固件零件编码
FASTENER PART NUMBER

螺丝
SCREWS

*1	材质	Material

F: 铁 Steel
S: 奥氏体不锈钢 Austenitic stainless steel
M: 马氏体不锈钢 Martensitic stainless steel
B: 铜合金 Copper alloy
P: 聚碳酸酯 Polycarbonate
N: 聚酰胺 Polyamide
V: PVC
A: ABS
X: 聚缩醛 Polyacetal
L: 铝 Aluminum

螺母 & 垫片

NUTS & WASHERS

*2 描述	Description
首字母	First letter
S: 机器螺丝	Machine screw
T: 自攻螺丝	Tapping screw
M: 木螺丝	Wood screw
B: 螺栓	Bolt
W: 垫片	Washer
N: 螺母	Nut

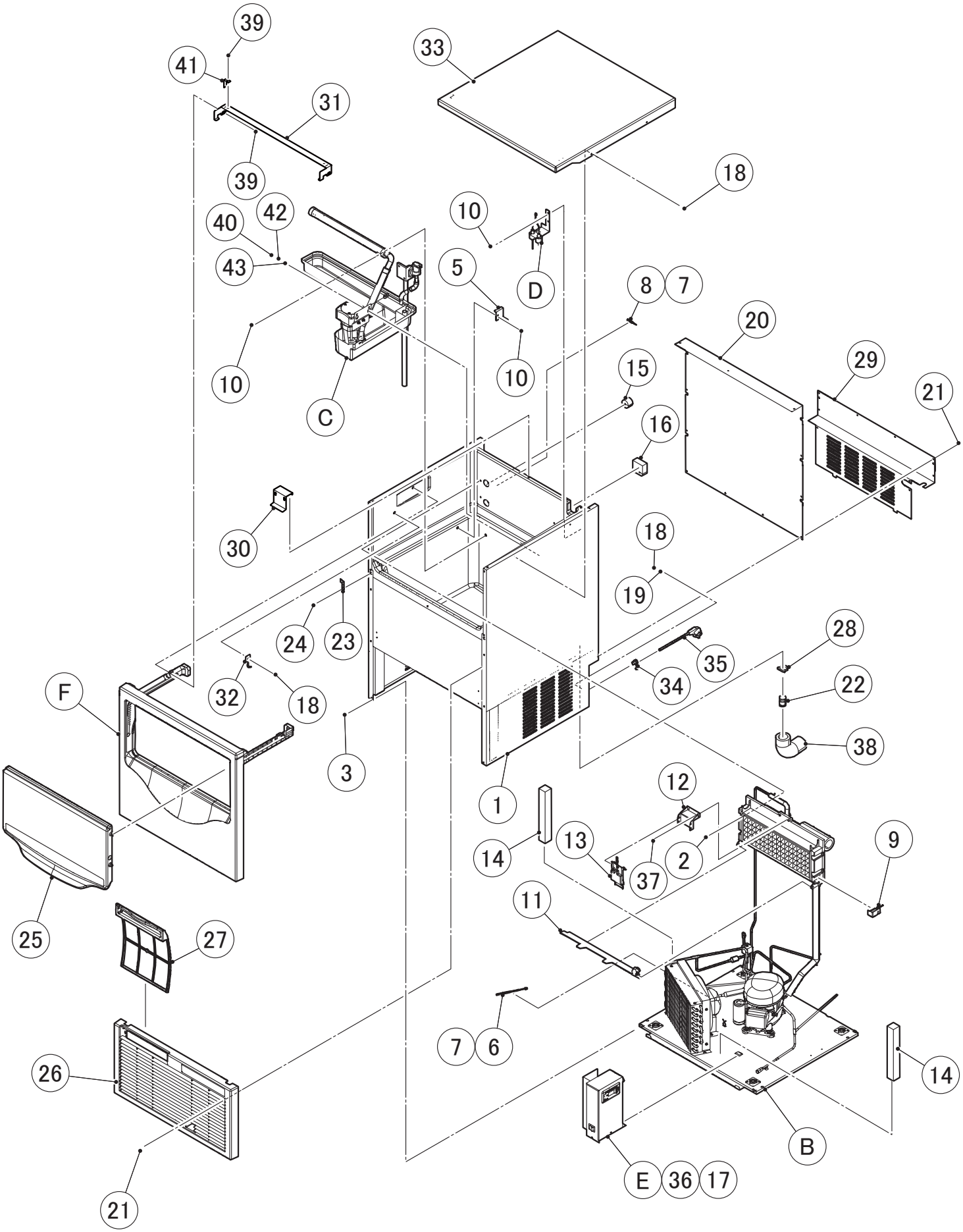
39
41
31
39
33
18
10
42
40
43
5
D
8
7
20
29
21
10
10
C
15
16
30
18
19
24
23
28
35
34
22
32
18
F
3
38
1
12
14
13
2
37
9
11
25
27
7
6
26
14
B
E
36
17
21

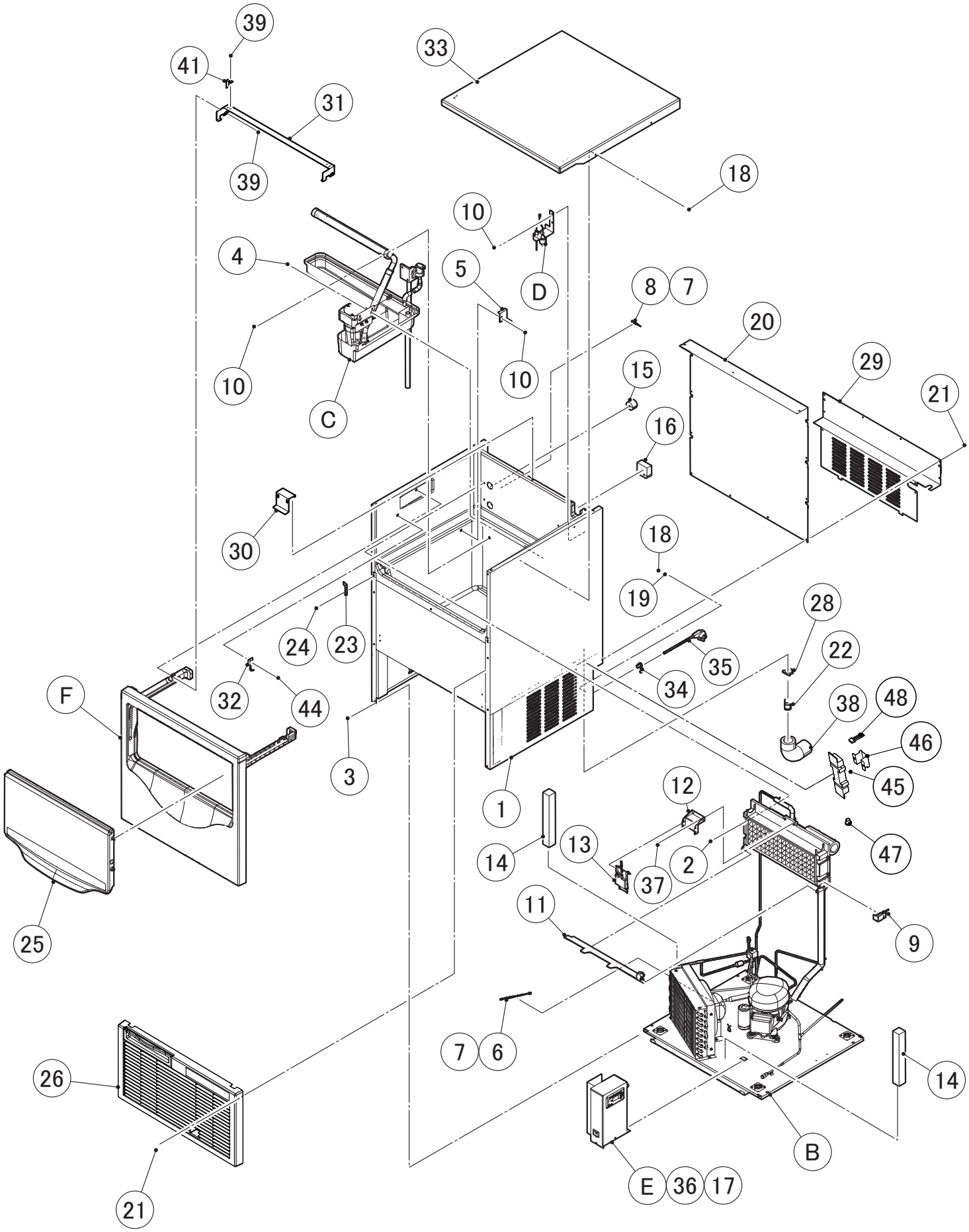
39
41
31
39
33
18
10
4
5
D
8
7
20
29
21
10
10
C
15
16
30
18
19
28
24
23
22
35
34
F
32
44
38
48
46
3
1
45
12
47
14
13
2
37
11
9
25
7
6
26
14
B
E
36
17
21

型号/Model: **SRM-140A**
SRM-175A

标题/TITLE: **A. 制冰机总组图**
ICE CUBER ASSY

序号 INDEX NO.	部品名称 DESCRIPTION	材质或型号 MATERIAL OR MODEL NUMBER	部品序号 PART NUMBER	需求数量 REQ'D NUMBER			
				G-1 H-0	H-1 N-0,N-1	N-2 and later	
B	冷冻回路REFRIGERATION CIRCUIT	M072, M079,M79-C007	125214A01	1	1	1	
		M073, M080,M80-C007	125331A01	1	1	1	
		M079-C001, M079-C004,C003	125214A02	-	1	1	
C	水循环回路 WATER CIRCUIT ASSY		271516A01	1	1	1	
D	液位检知电极组件 WATER LEVEL SENSOR ASSY		383255A01	1	1	1	
E	控制盒组件CONTROL BOX ASSY	M072, M073	272323A01	1	1	1	
		M080, M079 M079-C007, M080-C007	272323001	-	1	1	
		M079-C001, M079-C004,-C003	272323003	-	1	1	
		M122,M123	272323005	-	1	1	
F	前门框组件 FRONT PANEL ASSY		385007A01	1	1	1	
G	标贴位置图 LABEL LOCATION	M072	271519A01	1	1	1	
		M073	271519A02	1	1	1	
		M080	271519002	-	1	1	
		M080-C007	271519008	-	1	1	
		M079	271519001	-	1	1	
		M079-C007	271519007	-	1	1	
		M079-C001	271519005	-	1	1	
		M079-C004	271519006	-	1	1	
		M079-C003	271519011	-	1	1	
		M122	271519009	-	1	1	
		M123	271519010	-	1	1	
Q	附件 ACCESSORIES	M072, M073	A03383-01	1	1	1	
		M080, M079, M080-C007 M079-C007, M079-C004,-C003	A03650-01	-	1	1	
		M079-C001	A03763-01	-	1	1	
		M122,M123	A03383001	-	1	1	
1	本体 - 140/175 UNIT BODY - 140/175	M072, M073, M080, M079 M079-C007, M080-C007	125213G01	1	1	1	
		M079-C004,-C003	125213001	1	1	1	
2	组合螺栓 HEX HEAD BOLT		FBK0520S0	4	4	4	
3	尖头自攻法兰螺丝 HEX. TAPPING SCREW W-FLANGE		P01572-01	4	4	4	
4	组合螺栓 HEX HEAD BOLT (SPRING WASHER AND FLAT WASHER)		FBK0510S0	-	2	2	
5	水槽支架 BRACKET - TANK		483123M01	1	1	1	

型号/Model: **SRM-140A**
SRM-175A

标题/TITLE: **A. 制冰机总组图**
ICE CUBER ASSY

序号 INDEX NO.	部品名称 DESCRIPTION	材质或型号 MATERIAL OR MODEL NUMBER	部品序号 PART NUMBER	需求数量 REQ'D NUMBER			
				G-1 H-0	H-1 N-0,N-1	H-1 and later	
6	冷凝器 - 热敏电阻 CONDENSER - SENSOR		P04107-01	1	1	1	
7	扎带 TIE	CV-100N,T18R	7920-0002	4	4	4	
8	制冰板 - 热敏电阻 EVAPORATOR SENSOR		P04608-01	1	1	1	
9	满冰开关 BIN SWITCH		P04108-01	1	1	1	
10	手拧螺母 THUMBSCREW		415949G12	7	6	6	
11	导冰板 ICE GUIDE		P04444-01	1	1	1	
12	冰厚检知支架 BRACKET - ICE THICKNESS		P04112-01	1	1	1	
13	冰厚检知电极 ICE THICKNESS SENOR		P04113-01	1	1	1	
14	隔热材 - 控制盒 INSULATION - COND		483105P01	2	2	2	
15	隔热材 - 制冰板 INSULATION - EVAP		481920P01	2	2	2	
16	卡线隔热材 CLAMP FOAM		481913P01	1	1	1	
17	T2 自攻螺丝 T2 TRUSS HEAD SCREW		FT20408F0	1	1	1	
18	圆头细牙不锈钢螺丝 TRUSS HEAD SCREW		FST0408S0	11	10	10	
19	弹性垫片 SPRING WASHER		FWSP04S0	2	2	2	
20	后盖板 REAR COVER		271517M01	1	1	1	
21	圆头细牙铁螺丝 TRUSS HEAD SCREW		FST0408F0	17	17	17	
		M122,M123	FST0408F0	-	19	19	
22	排水管 OUTLET HOSE		P04122-01	1	1	1	
23	本体挂钩 HOOK - BODY		483124M01	2	2	2	
24	铆钉 RIVET	SSD43SSBS(t3.2~4.8)	7170-0005	4	4	4	
25	门 DOOR		385008G01	1	1	1	
26	通风窗组件 LOUVER ASSY		3C0588A01	0	1	1	
	通风窗 LOUVER		125218P01	1	0	0	
	过滤网 AIR FILTER		250727G04	1	0	0	
28	尼龙扎带 NYLON TIE	CV-200N,T50R CV-200N,T50R	7920-0010	-	1	1	
29	后背板 REAR PANEL		271518M01	1	1	1	
30	灵敏度检知钣金 PANEL - ICE THICKNESS		483198M01	1	1	1	
31	支架(B) FRAME (B)		385009M01	1	1	1	
32	冰铲挂钩 HOOK		479479M01	1	-	-	
			479479M02	-	1	1	

型号/Model: **SRM-140A**
SRM-175A

标题/TITLE: **A. 制冰机总组图**
ICE CUBER ASSY

序号 INDEX NO.	部品名称 DESCRIPTION	材质或型号 MATERIAL OR MODEL NUMBER	部品序号 PART NUMBER	需求数量 REQ'D NUMBER			
				G-1 H-0	H-1 N-0,N-1	N-2 and later	
33	顶板组件 TOP PANEL ASSY		385010G01	1	1	1	
34	电源线卡线扣 BUSHING	M072, M073, M080, M079 M079-C007,M080-C007	448949-01	1	1	1	
		M079-C004,-C003	420472-02	1	1	1	
35	电源线 POWER SUPPLY CORD	M072, M073	P00193-01	1	1	1	
		M080, M079	P04052-01	-	1	1	
		M079-C007,M080-C007	P00048-01	-	1	1	
		M079-C001	P04145-01	-	1	1	
		M079-C004,-C003	P00004-01	-	1	1	
36	电容 CAPACITOR		P00228-01	-	1	1	
37	圆头螺丝 HRUSS HEAD SCREW		P04111F01	2	2	2	
38	隔热管 INSULATION TUBE(A)		H73858200	1	1	1	
39	组合螺栓 HEX HEAD BOLT (SPRING WASHER AND FLAT WASHER)		FBK0412S0	6	6	6	
40	圆头细牙不锈钢螺丝 TRUSS HEAD SCREW		FST0512S0	2	-	-	
41	螺丝挡板 STOPPER		484586M01	2	2	2	
42	弹垫 SPRING WASHER		FWSP05S0	2	-	-	
43	平垫 FLAT WASHER		FWPL05S0	2	-	-	
44	铆钉 RIVET		7170-0203	-	2	2	
45	双向转换器 BILATERAL KONVERTER	M122,M123	C06483-01	-	1	1	
46	支架 BRACKET (B)	M122,M123	4C0363M01	-	1	1	
47	套管 BUSHING	M122,M123	428394-02	-	1	1	
48	转换器连接线 CONVERTER CONNECTING LINE	M122,M123	4C0395Z01	-	1	1	

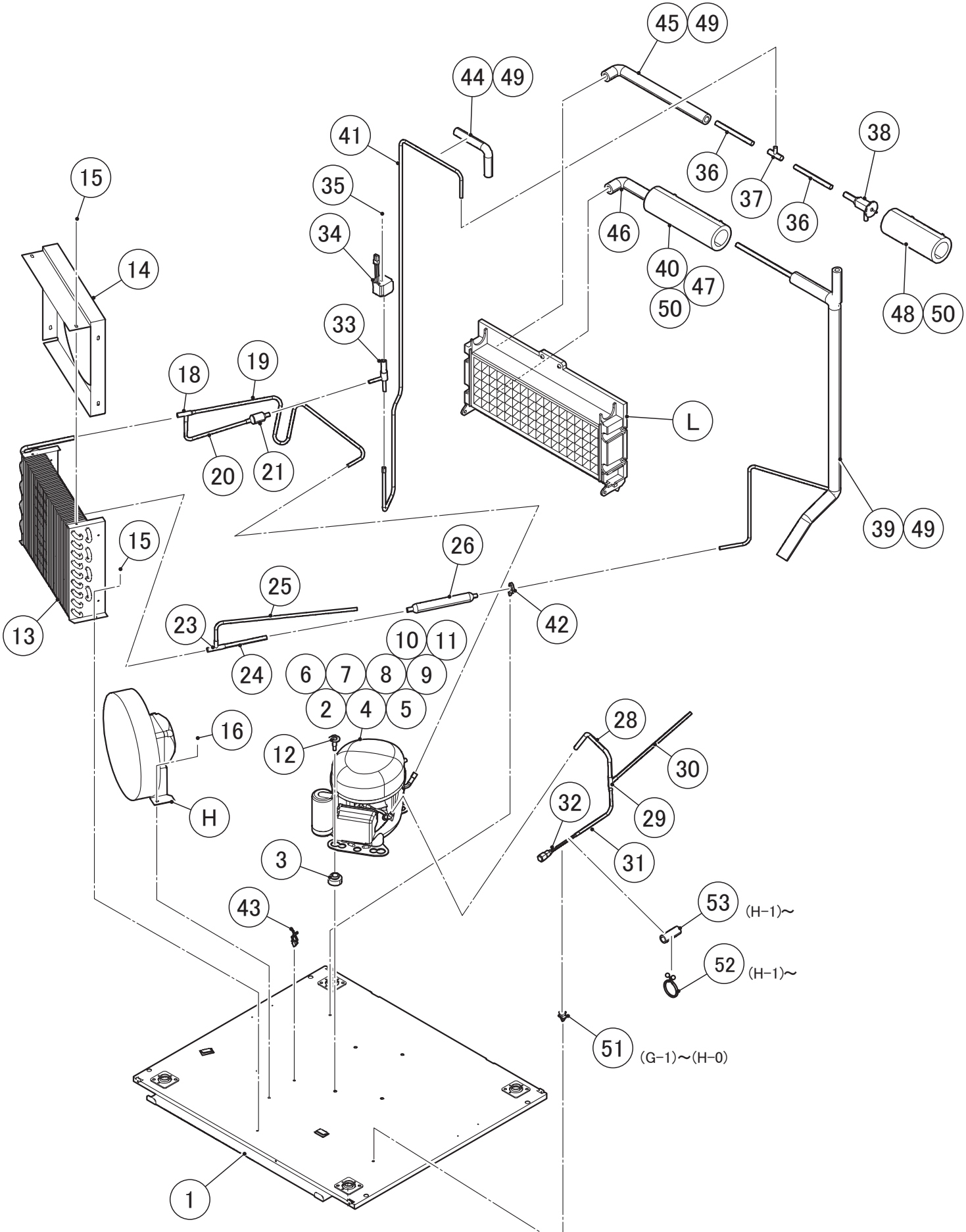
45
49
44
49
41
38
15
35
36
37
36
34
46
40
47
50
48
50
14
33
L
18
19
20
21
39
49
15
26
25
13
23
42
24
10
11
6
7
8
9
2
4
5
16
12
28
30
32
29
H
31
3
53
(H-1)~
43
52
(H-1)~
51
(G-1)~(H-0)
1

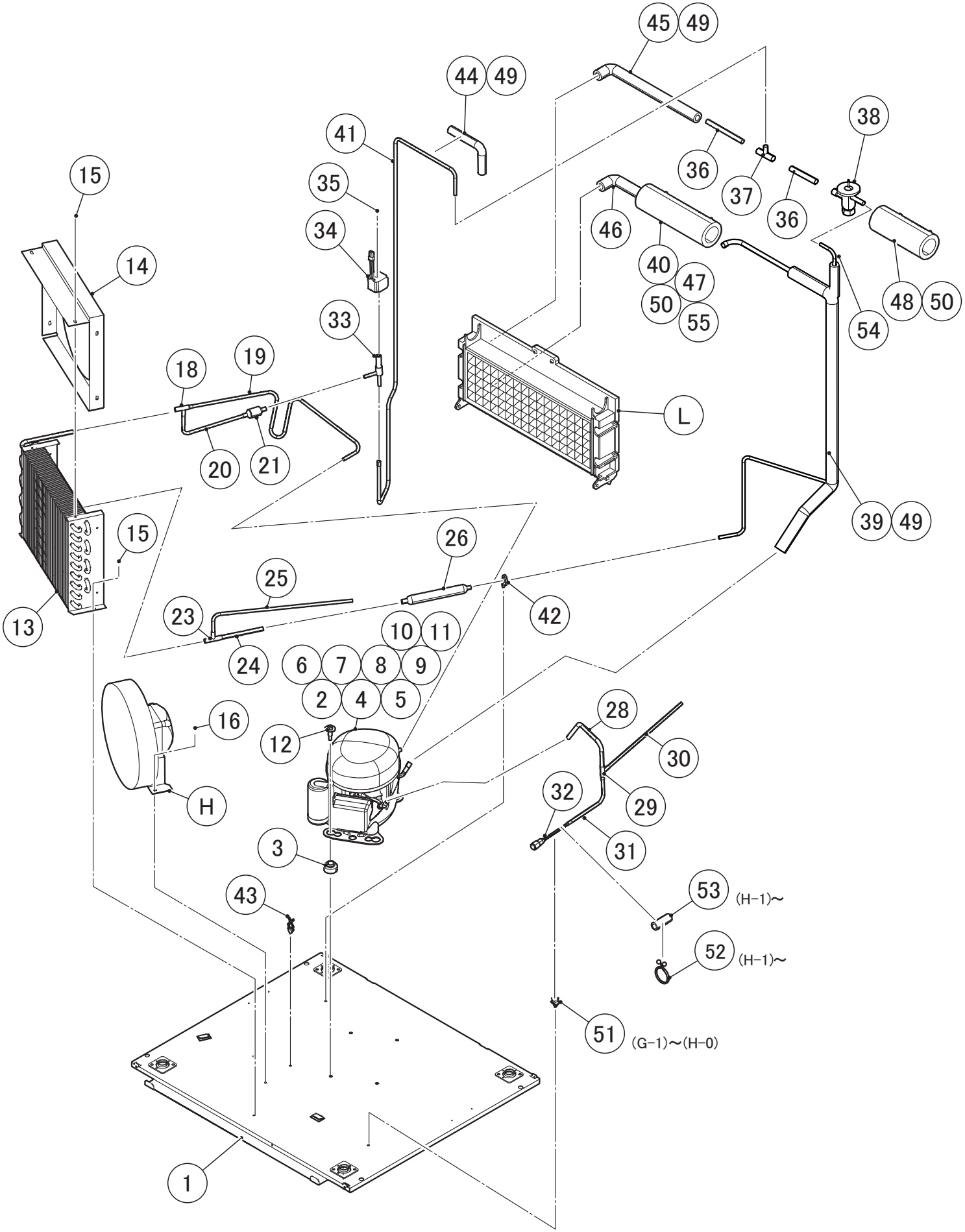
45
49
44
49
41
38
15
35
36
37
36
34
46
14
40
47
50
55
48
50
54
33
L
18
19
20
21
39
49
15
26
25
13
23
42
24
10
11
6
7
8
9
2
4
5
16
12
28
30
H
32
29
31
3
43
53
(H-1)~
52
(H-1)~
51
(G-1)~(H-0)
1

型号/Model: **SRM-140A**
SRM-175A

标题/TITLE: **B. 制冷回路**
REFRIGERATION CIRCUIT

序号 INDEX NO.	部品名称 DESCRIPTION	材料或型号MATERIAL OR MODEL NUMBER	部品序号 PART NUMBER	需求数量 REQ'D NUMBER				
				G-1 H-0	H-1 J-0	J-1 K-1	K-2 M-0	M-1 and later
H	冷凝风扇马达组件 FAN MOTOR ASSY	M079-C001, M079-C004,-C003	385013A01	1	1	1	1	1
		M072, M073, M079, M080 M079-C007,M080-C007	385013A01	1	1	-	-	-
			385013A02	-	-	1	1	1
L	制冰板组件 EVAP ASSY		385032A01	1	1	1	1	1
1	底板 - 140/175(G) BASE - 140/175 (G)	M072, M073, M079, M080 M079-C007,M080-C007	385011G01	1	1	1	1	1
		M079-C001, M079-C004,-C003	385011G02	-	1	1	1	1
2	压缩机 COMPRESSOR	GPY12RA (M072, M079,M079-C007)	P04509-01	1	1	1	1	1
		ML80TG (M073, M080,M080-C007)	P04519-01	1	1	1	1	1
		NL10MF(M079-C001,-C003,-C004)	P05087-01	-	1	1	1	1
3	橡胶垫圈 RUBBER GROMMET	M072, M073, M079, M080 M079-C007,M080-C007	P04510-01	4	4	4	4	4
	橡胶垫圈 GROMMET	M079-C001, M079-C004,-C003	450897-01	-	4	4	4	4
4	整体式两器-启动器和保护器 STARTER - PROTECTOR	M072,M079,M079-C007	P04511-01	1	1	1	1	1
		M073,M080,M080-C007	P04520-01	1	1	1	1	1
	启动继电器 STARTING RELAY	M079-C001, -C003,-C004	P05107-01	-	1	1	1	1
5	启动电容 STARTING CAPACITOR	M072, M073, M079, M080 M079-C007,M080-C007	P04512-01	1	1	1	1	1
		M079-C001, -C003,-C004	P05108-01	-	1	1	1	1
6	电容支架 BRACKET - CAPACITOR	Except M079-C001,-C003,-C004	P04513-01	1	1	1	1	1
7	接地螺丝 SCREW - EARTH	Except M079-C001,-C003,-C004	P04514-01	1	1	1	1	1
8	螺丝 SCREW	Except M079-C001,-C003,-C004	P04515-01	1	1	1	1	1
9	螺丝 SCREW	Except M079-C001,-C003,-C004	P04516-01	1	1	1	1	1
10	接线盒 TERMINAL COVER	M072,M073,M079,M080 M079-C007,M080-C007	P04517-01	1	1	1	1	1
	盖 COVER	M079-C001,-C003,-C004	4A3265-01	-	1	1	1	1
11	电器线夹 CABLE CLAMP	M072,M073,M079,M080 M079-C007,M080-C007	P04518-01	1	1	1	1	1
	线夹 CORD RELIEF	M079-C001,-C003,-C004	4A3264-01	-	1	1	1	1
12	螺栓 BOLT		468180-01	4	4	4	-	-
			C05825-01	-	-	-	2	2
13	冷凝器 CONDENSER		P04445-01	1	1	1	1	1

型号/Model: **SRM-140A**
SRM-175A

标题/TITLE: **B. 制冷回路**
REFRIGERATION CIRCUIT

序号 INDEX NO.	部品名称 DESCRIPTION	材料或型号MATERIAL OR MODEL NUMBER	部品序号 PART NUMBER	需求数量 REQ'D NUMBER				
				G-1 H-0	H-1 J-0	J-1 K-1	K-2 M-0	M-1 and later
14	冷凝器风罩 SHROUD		385012M01	1	1	1	1	1
15	T2圆头铁螺丝 T2 TRUSS HEAD SCREW		FT20408F0	7	7	7	7	7
16	组合螺栓 HEX HEAD BOLT		FBK0512F0	2	2	2	2	2
18	三通 TEE	铜管(A) - 高压侧 COPPER TUBE (A) - HIGH SIDE (385014G01) (389300G01)	420041-03	1	1	1	1	1
19	铜管 - 吐出管 COPPER TUBE - DISCHARGE	铜管(A) - 高压侧 COPPER TUBE (A) - HIGH SIDE (385014G01) M072,M073,M079,M080 M079-C007,M080-C007	385034M01	1	1	1	1	1
		铜管(A) - 高压侧 COPPER TUBE (A) - HIGH SIDE (389300G01) M079-C001,-C003,-C004	389301M01	-	1	1	1	1
20	铜管(A1) - 高压侧 COPPER TUBE (A1) - HIGH SIDE	铜管(A) - 高压侧 COPPER TUBE (A) - HIGH SIDE (385014G01) (389300G01)	483020M01	1	1	1	-	-
		铜管(A) - 高压侧 COPPER TUBE (A) - HIGH SIDE (385014G02) (389300G02)	483020M02	-	-	-	1	1
21	过滤器 STRAINER	铜管(A) - 高压侧 COPPER TUBE (A) - HIGH SIDE (385014G01) (389300G01)	P00008-01	1	1	1	1	1
23	三通 TEE	铜管(B) - 高压侧 COPPER TUBE (B) - HIGH SIDE (385015G01)	420041-02	1	1	1	1	1
24	铜管 - 冷凝器 COPPER TUBE - COND	铜管(B) - 高压侧 COPPER TUBE (B) - HIGH SIDE (385015G01)	483028M01	1	1	1	1	1
25	铜管 - 工艺管 COPPER TUBE - PROCESS	铜管(B) - 高压侧 COPPER TUBE (B) - HIGH SIDE (385015G01)	483029M01	1	1	1	1	1
26	干燥过滤器 DRIER		P00026-01	1	1	1	1	1
28	铜管 - 压缩机 COPPER TUBE - COMP	铜管 - 工艺管 COPPER TUBE - PROCESS (385030G01) M072,M073,M079,M080 M079-C007,M080-C007	483021M01	1	1	1	1	1
		铜管 - 工艺管 COPPER TUBE - PROCESS (389302G01) M079-C001,-C003,-C004	485168M01	-	1	1	1	1
29	三通 TEE	铜管 - 工艺管 COPPER TUBE - PROCESS (385030G01) M072,M073,M079,M080 M079-C007,M080-C007	420041-03	1	1	1	1	1
		铜管 - 工艺管 COPPER TUBE - PROCESS (389302G01) M079-C001,-C003,-C004	417394-01	-	1	1	1	1
30	铜管 - 工艺管(A) COPPER TUEB - PROCESS (A)	铜管 - 工艺管 COPPER TUBE - PROCESS (385030G01) (389302G01)	483022M01	1	1	1	1	1
31	铜管 - 工艺管(B) COPPER TUBE - PROCESS (B)	铜管 - 工艺管 COPPER TUBE - PROCESS (385030G01) (389302G01)	483023M01	1	1	1	1	1
32	填充阀 ACCESS VALVE	铜管 - 工艺管 COPPER TUBE - PROCESS (385030G01) (389302G01)	455119-01	1	-	-	-	-
		Note: See service information HSU-010	457729-01	-	1	1	1	1
33	热气阀阀体 VALVE BODY		P04446-01	1	1	1	-	-
			C06028-01	-	-	-	1	1

型号/Model: **SRM-140A**
SRM-175A

标题/TITLE: **B. 制冷回路**
REFRIGERATION CIRCUIT

序号 INDEX NO.	部品名称 DESCRIPTION	材料或型号MATERIAL OR MODEL NUMBER	部品序号 PART NUMBER	需求数量 REQ'D NUMBER				
				G-1 H-0	H-1 J-0	J-1 K-1	K-2 M-0	M-1 and later
34	热气阀线圈 - 线束(G) HARNESS - VALVE COIL (G)	JDD-4A-P	383036G01	1	1	1	-	-
			383036G02	-	-	-	1	1
35	螺栓 BOLT	DCQ-00-WX	P04148-01	1	1	1	-	-
			C06030F01	-	-	-	1	1
36	铜管 - 膨胀阀出口 COPPER TUBE - EXP (OUT)	M5x7 M072, M079,M079-C007 M079-C001,-C003,-C004	483015M01	2	2	2	2	2
		M073,M080,M080-C007	483015M01	2	2	2	2	1
		M072, M079,M073,M080 M079-C001,-C003,-C004 M079-C007,M080-C007	483015M03	-	-	-	-	1
37	三通 TEE		420041-05	1	1	1	1	1
38	膨胀阀 EXPANSION VALVE		P04458-01	1	1	1	1	-
		M072, M079,M079-C007 M079-C001,-C003,-C004	C06101-01	-	-	-	-	1
		TDS1	P04490-01	1	1	1	1	-
		M073,M080,M080-C007	C06102-01	-	-	-	-	1
39	热交换组件 HEAT EXCHANGE ASSY		385016G01	1	1	1	1	-
		M072, M079,M073,M080 M079-C007,M080-C007	385016G02	-	-	-	-	1
		M079-C001,-C003,-C004	389303G01	-	1	1	1	1
40	膨胀阀感温筒扎带 BAND - EXP. VALVE	M072, M079,M073,M080 M079-C001,-C003,-C004 M079-C007,M080-C007	443461-01	-	-	-	-	1
			P04458F01	1	1	1	1	-
41	铜管 - 热气阀 COPPER TUBE - HOT GAS		385031M01	1	1	1	-	-
			385031M02	-	-	-	1	1
42	插销式扎带 PUSH MOUNT TIE		436156-01	1	1	1	1	1
43	卡线扣 WIRE RETAINER		427902-03	2	1	1	1	1
44	铜管隔热材 INSULATION TUBE		H71020160	1	1	1	1	1
45	铜管隔热材 INSULATION TUBE	M072, M079,M079-C007	H71323300	1	1	1	1	1
46	铜管隔热材 INSULATION TUBE		H71323120	1	1	1	1	1
47	铜管隔热材 INSULATION TUBE		H73858200	1	1	1	1	1
48	铜管隔热材 INSULATION TUBE		H73858150	1	1	1	1	1

型号/Model**: SRM-140A**
SRM-175A

标题/TITLE**: B. 制冷回路**
REFRIGERATION CIRCUIT

序号 INDEX NO.	部品名称 DESCRIPTION	材料或型号MATERIAL OR MODEL NUMBER	部品序号 PART NUMBER	需求数量 REQ'D NUMBER				
				G-1 H-0	H-1 J-0	J-1 K-1	K-2 M-0	M-1 and later
49	扎带 TIE		7920-0002	11	11	11	11	11
50	尼龙扎带 NYLON TIE	CV-100N,T18R	7920-0010	4	4	4	4	4
51	填充阀夹**持**卡**扣** ROD HOLDER	CV-200N,T50R	456778-01	1	-	-	-	-
52	卡线扣 WIRE RETAINER		427902-05	-	1	1	1	1
53	铜管隔热材 INSULATION TUBE	铜管 – 工艺管 COPPER TUBE - PROCESS (385030G01) (389302G01)	H70717050	-	1	1	1	1
54	铜管 COPPER TUBE	（维修更换膨胀阀使用）	3C0575M01	-	-	-	-	1
55	膨胀阀支架 HOLDER - EXP.VALVE1/2		3C0057M01	-	-	-	-	1

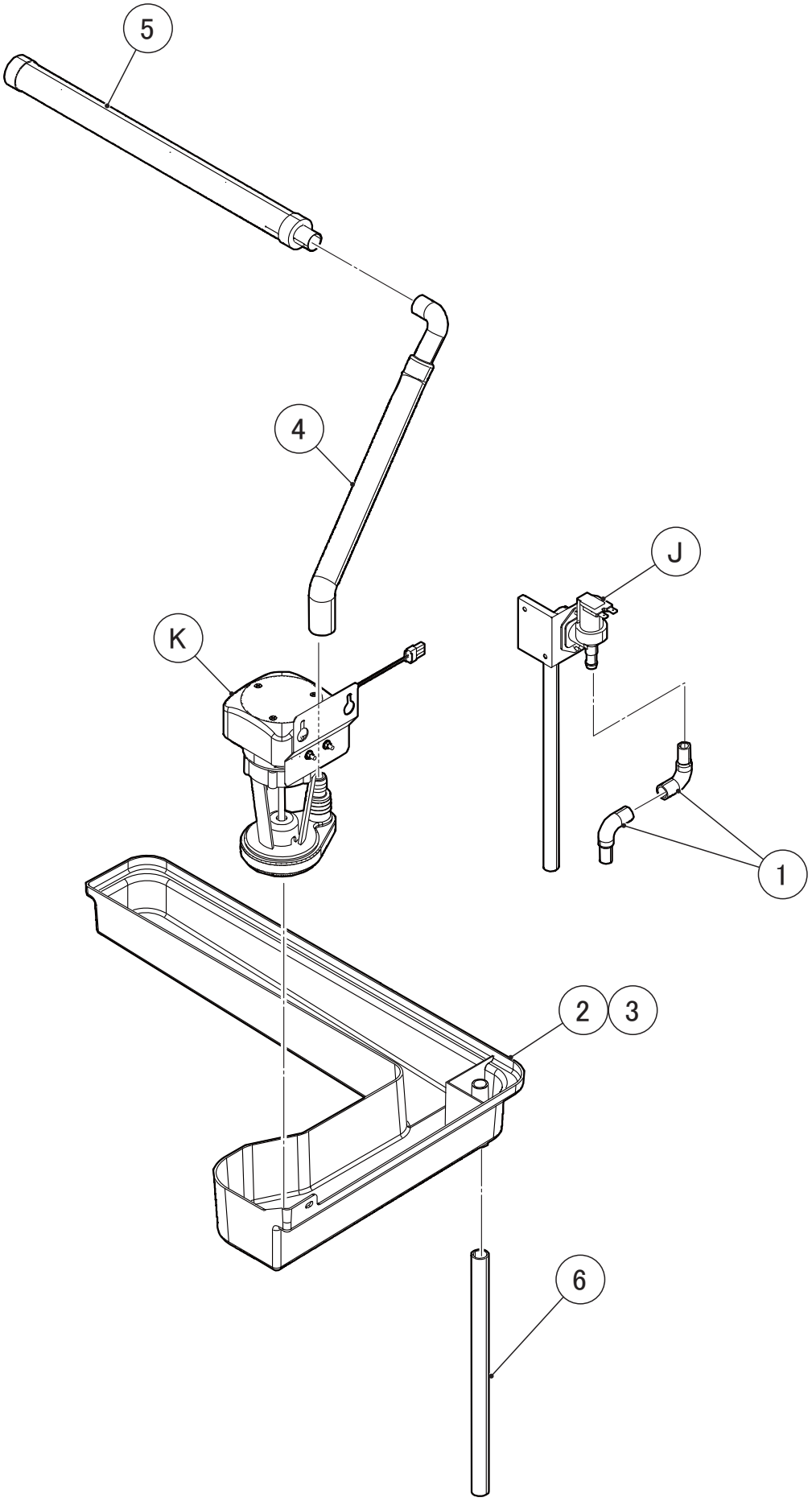
5
4
J
K
1
2
3
6

型号/Model: **SRM-140A**
SRM-175A

标题/TITLE: **C. 水循环回路**
WATER CIRCUIT ASSY

序号 INDEX NO.	部品名称 DESCRIPTION	材料或型号 MATERIAL OR MODEL NUMBER	部品序号 PART NUMBER	需求数量 REQ'D NUMBER			
				G-1 H-0	H-1 and later		
J	供水组件 WATER SUPPLY ASSY		385038A01	1	1		
K	循环水泵马达组件 PUMP MOTOR ASSY		383050A02	1	1		
1	供水管(A) WATER SUPPLY TUBE (A)		481924P01	2	2		
2	水槽 WATER TANK		125178P01	1	1		
3	塞子 PLUG		472988R01	1	1		
4	供水管(B) WATER SUPPLY TUBE (B)		483024P01	1	1		
5	散水管 SPRAY TUBE		P04456-01	1	1		
6	硅胶软管 SI HOSE		H11418300	1	1		

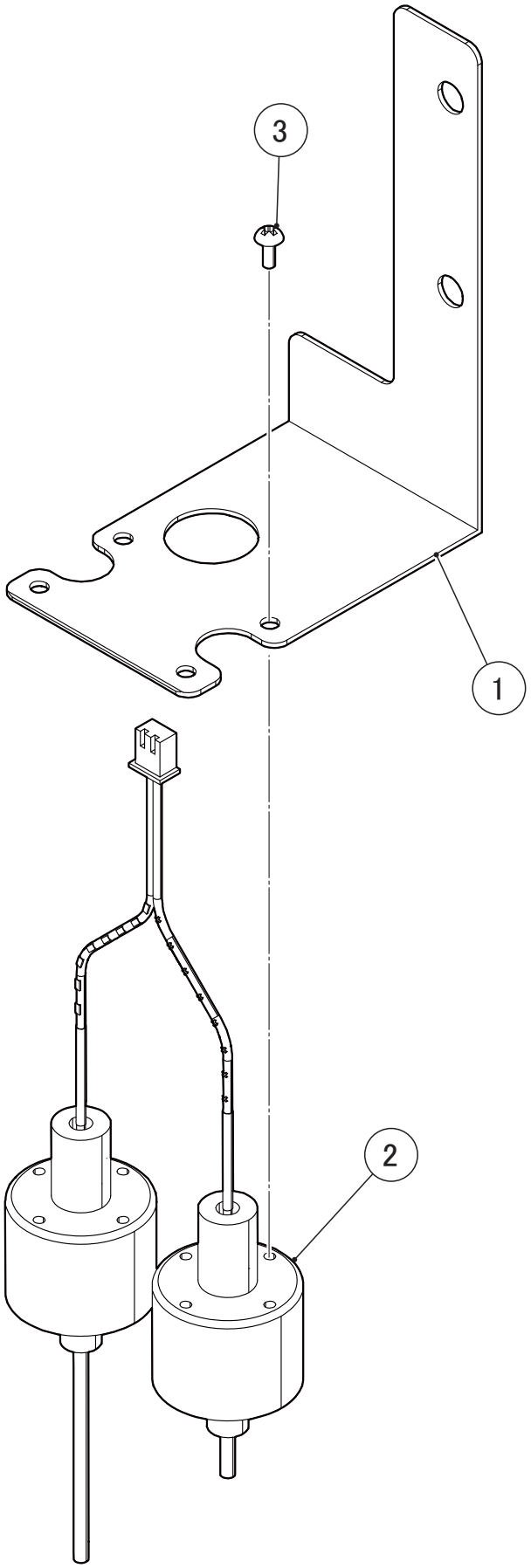
3
1
2

型号/Model: **SRM-140A**
SRM-175A

标题/TITLE: **D. 液位检知电极组件**
WATER LEVEL SENSOR ASSY

序号 INDEX NO.	部品名称 DESCRIPTION	材料或型号 MATERIAL OR MODEL NUMBER	部品序号 PART NUMBER	需求数量 REQ'D NUMBER			
				G-1 H-0	H-1 and later		
1	液位检知电极支架 BRACKET - WLS		482095M01	1	1		
2	液位检知电极 WATER LEVEL SENSOR		P04109-01	1	1		
3	M3螺钉 SCREW		P04109F01	4	4		

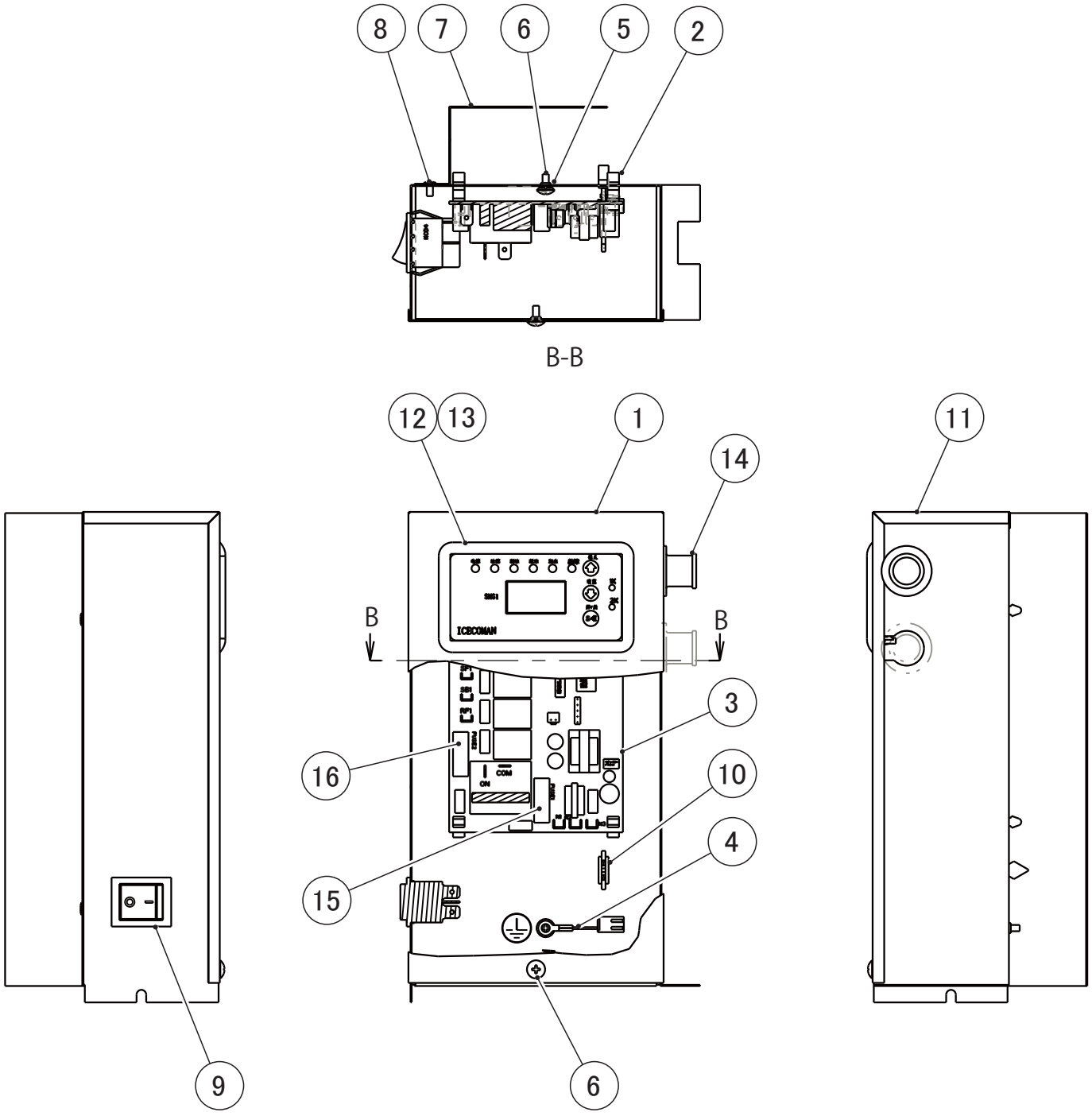
8
7
6
5
2
B-B
12
13
1
14
11
B
B
3
16
10
4
15
9
6

型号/Model: **SRM-140A**
SRM-175A

标题/TITLE: **E. 控制盒组件**
CONTROL BOX ASSY

序号 INDEX NO.	部品名称 DESCRIPTION	材料或型号 MATERIAL OR MODEL NUMBER	部品序号 PART NUMBER	需求数量 REQ'D NUMBER			
				G-1 H-0	H-1 and later		
1	控制盒 CONTROL BOX		385056M01	1	1		
2	控制板支架 BOARD SUPPORT		414929-02	4	4		
3	控制板 CONTROLLER BOARD	M072,M073,M079,M080 M079-C007,M080-C007	C04089-02	1	1		
		M079-C001,-C003,-C004	P04089-04	-	1		
		M122,M123	C04089-02	-	1		
4	接地线 EARTH WIRE		P04205-01	1	1		
5	弹性垫圈 SPRING WASHER		FWSP04S0	1	1		
6	圆头细牙不锈钢螺丝 TRUSS HEAD SCREW		FST0408S0	2	2		
7	控制盒支架 BRACKET - CB		483148M01	1	1		
8	铆钉 RIVET	SSD42SSBS(t1.6~3.2)	7170-0002	2	2		
9	开关 POWER SWITCH	KCD4	P04099-01	1	1		
10	卡线扣 WIRE RETAINER	No.4253	427902-05	1	1		
11	控制盒盖 CONTROL BOX COVER		385057M01	1	1		
12	显示屏 DISPLAY BOARD	M072,M073	P04500-01	1	1		
		M080, M079,M079-C001 M079-C007,M080-C007	P04500-02	-	1		
13	显示屏线束 HAENESS - CONTROL		P04560-01	1	1		
14	橡胶保护套 GROMMET		4H2568-02	1	1		
15	保险丝 FUSE	250V 1.0A	P04089F01	1	1		
16	保险丝 FUSE	250V 6.3A	P04089F02	1	1		

注： 部品15和16是部品3的附属品，即购入部品3时，部品15和16会包含在部品3中。
如果需要部品15或16，可直接订购。
Item 15 and 16 are accessories of item 3, which mean you purchase item 3, that will content item 15 and 16.
If you just need item 15 or 16, please make your order directly.

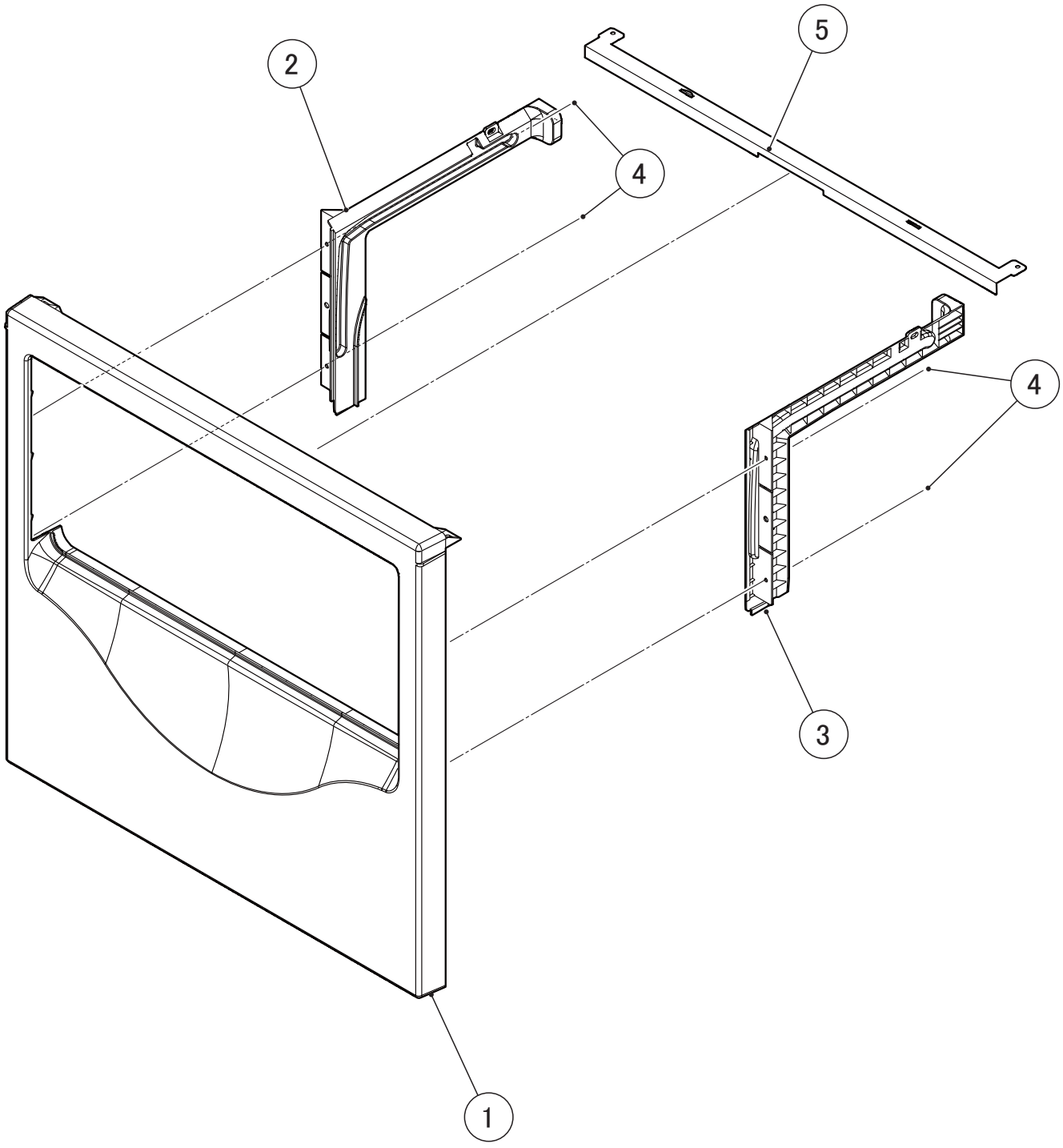
2
5
4
4
3
1

型号/Model: **SRM-140A**
SRM-175A

标题/TITLE: **F.前面框组件**
FRONT PANEL ASSY

序号 INDEX NO.	部品名称 DESCRIPTION	材料或型号 MATERIAL OR MODEL NUMBER	部品序号 PART NUMBER	需求数量 REQ'D NUMBER			
				G-1 H-0	H-1 and later		
1	前门框 FRONT PANEL		125217P01	1	1		
2	导轨 - 左 RAIL (L)		271538P01	1	1		
3	导轨 - 右 RAIL (R)		271539P01	1	1		
4	挂钩 - 前 HOOK - FRONT		483125M01	2	2		
5	T2自攻螺丝 TRUSS HEAD TAPPING SCREW T2		FT20410S0	8	8		
6	支架(A) FRAME (A)		385058M01	1	-		

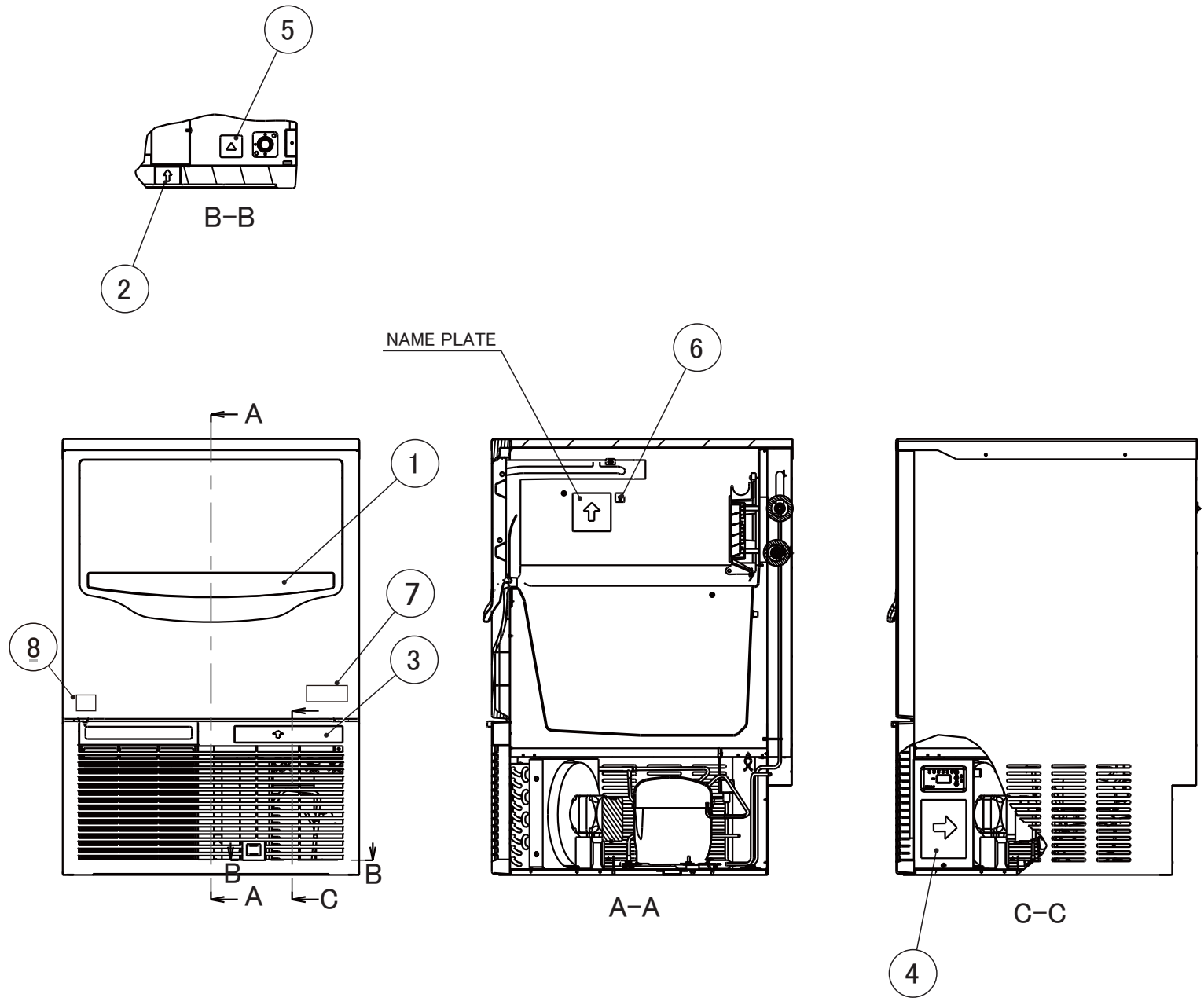
5
B–B
2
NAME PLATE
6
A
1
7
8
3
B
B
A
C
A–A
C–C
4

型号/Model: **SRM-140A**
SRM-175A

标题/TITLE: **G.标签位置**
LABEL LOCATION

序号 INDEX NO.	部品名称 DESCRIPTION	材料或型号MATERIAL OR MODEL NUMBER	部品序号 PART NUMBER	需求数量 REQ'D NUMBER			
				G-1 H-0	H-1 and later		
1	商标标签 EMBLEM		271732L01	1	1		
		M079-C003	286990L01	-	1		
2	电源标签 LABEL - POWER	M072,M073	481927L01	1	1		
		M080, M079 M079-C001,-C003,-C004 M079-C007,M080-C007	482711L01	-	1		
3	维护标签 MAINTENANCE LABEL	M072, M073	383076L01	1	1		
		M080, M079, M079-C004 M079-C007,M080-,C007 M079-C003	384479L01	-	1		
		M079-C001	388053L01	-	1		
4	线路图标签 WIRING LABEL	M072	385720L01	1	1		
		M073	385720L02	1	1		
		M079,M079-C007	387957L01	-	1		
		M080,M080-C007	387957L02	-	1		
		M079-C001,-C003,-C004	389299L01	-	1		
		M122	3C0579L01	-	1		
		M123	3C0579L02	-	1		
5	警告标签 CAUTION LABEL		473789L01	1	1		
6	环保标签 LABEL-REGULATION A		482347L01	1	1		
7	指示标签 INSTRUCTION LABEL	M072,M073,M122,M123	485832L01	-	1		
8	HACCP标签 LABEL - HACCP	M079,M079-C004 M080,M080-C007	476519L01	-	1		

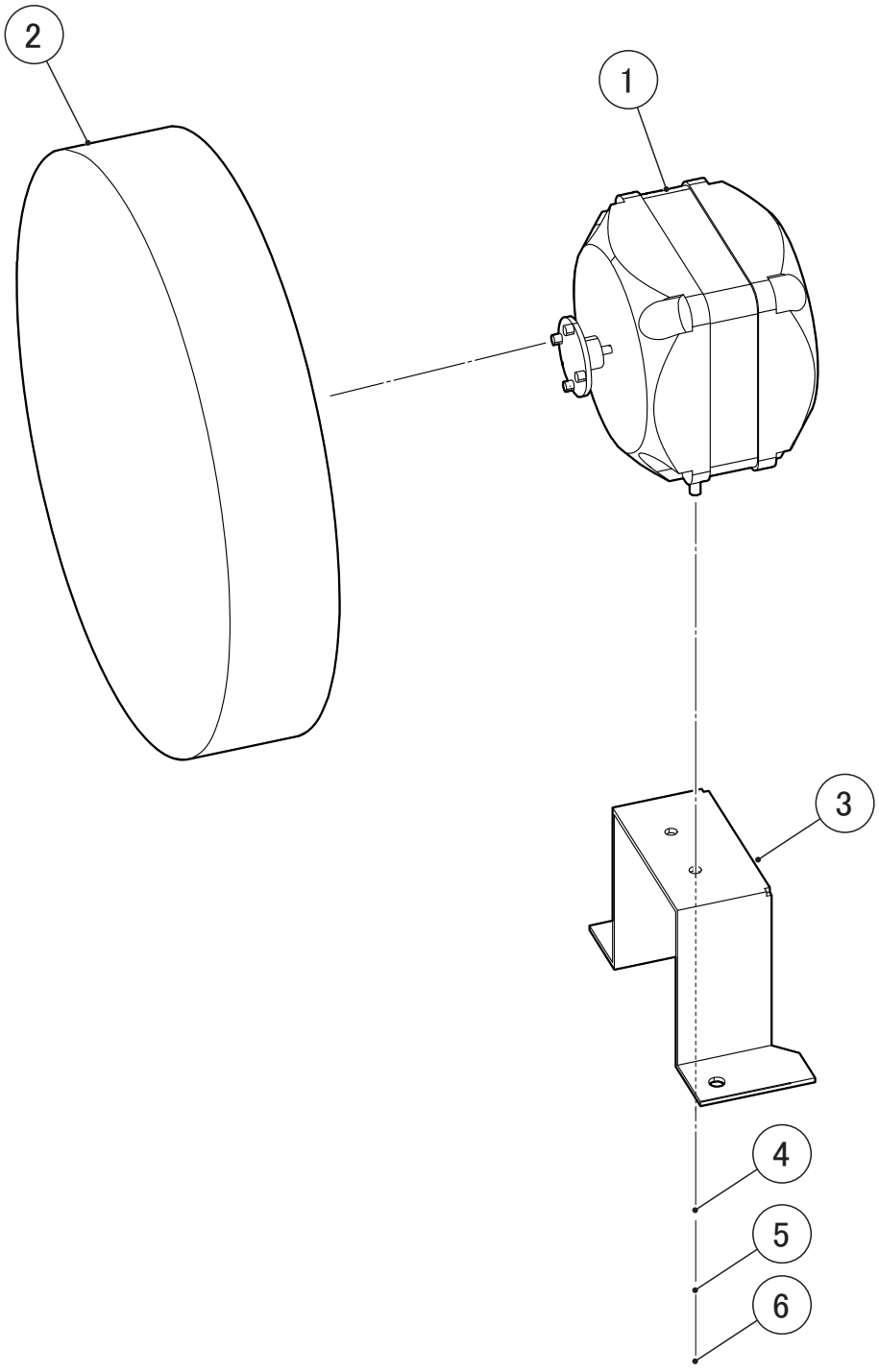
2
1
3
4
5
6

型号/Model: **SRM-140A**
SRM-175A

标题/TITLE: **H. 冷凝风扇马达组件**
FAN MOTOR ASSY

序号 INDEX NO.	部品名称 DESCRIPTION	材料或型号 MATERIAL OR MODEL NUMBER	部品序号 PART NUMBER	需求数量 REQ'D NUMBER			
				G-1 H-0	H-1 J-0	J-1 and later	
1	冷凝风扇马达 - 线束 HARNESS - FAN MOTOR (G)	M079-C001,-C003,-C004	385033G01	1	1	1	
		M072,M073,M079,M080	385033G01	1	1	-	
			383035G01	-	-	1	
2	扇叶 FAN BLADE	M079-C001,-C003,-C004	P04459-01	1	1	1	
		M072,M073,M079,M080	P04459-01	1	1	-	
			P00031-01	-	-	1	
3	冷凝风扇马达支架 BRACKET - FAN MOTOR		483424M01	1	1	1	
4	平垫圈 FLAT WASHER		FWPL04S0	2	2	2	
5	弹性垫圈 SPRING WASHER		FWSP04S0	2	2	2	
6	螺母 NUT		FNH104S0	2	2	2	

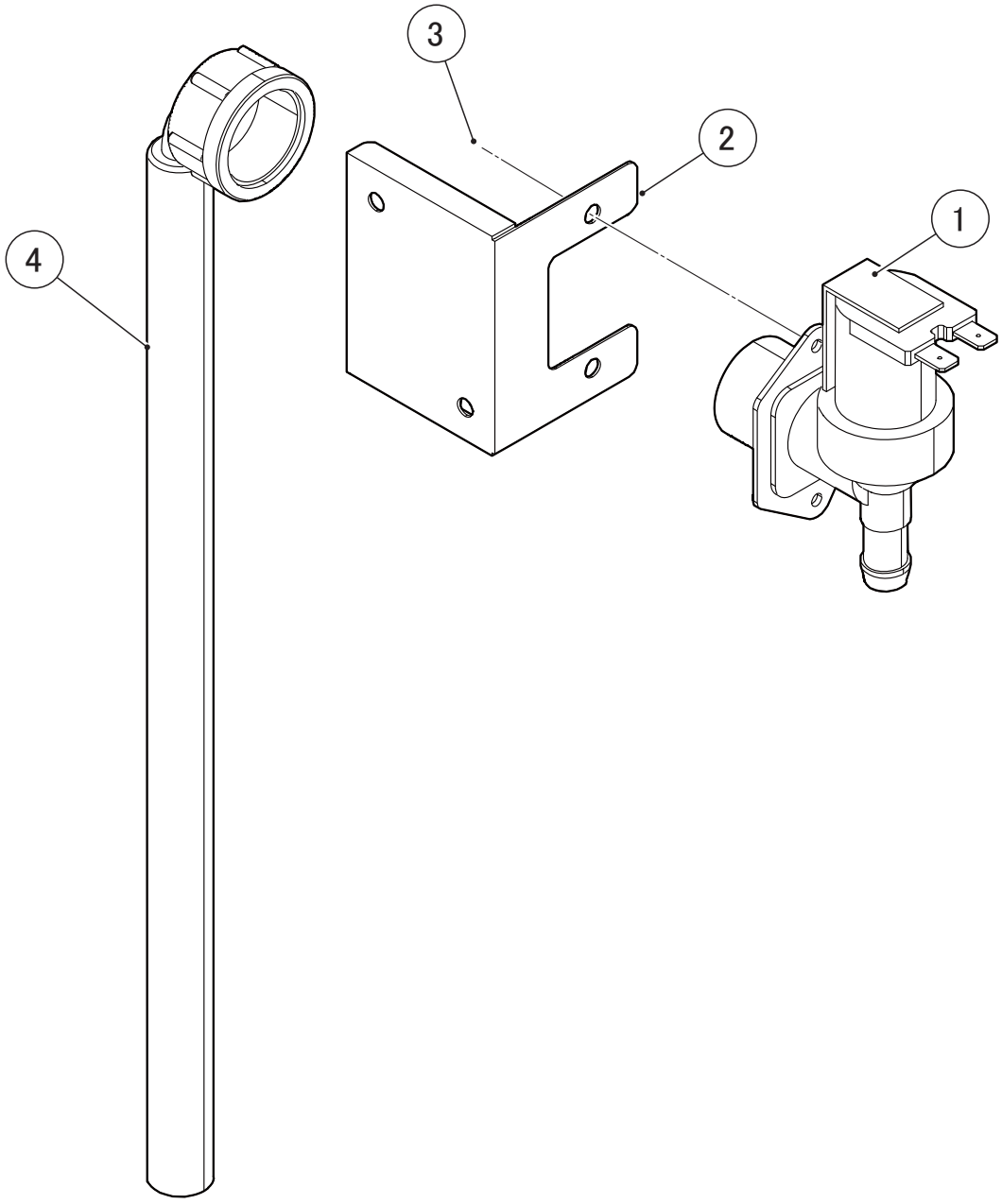
3
2
1
4

型号/Model: **SRM-140A**
SRM-175A

标题/TITLE: **J. 供水回路组件**
WATER SUPPLY ASSY

序号 INDEX NO.	部品名称 DESCRIPTION	材料或型号 MATERIAL OR MODEL NUMBER	部品序号 PART NUMBER	需求数量 REQ'D NUMBER			
				G-1 H-0	H-1 and later		
1	进水阀 WATER VALVE		P01031-01	1	1		
2	进水阀支架 BRACKET - WV		481897M01	1	-		
3	圆头细牙不锈钢螺丝 TRUSS HEAD SCREW		FST0408S0	2	-		
4	进水管 HOSE		P01401-01	1	1		

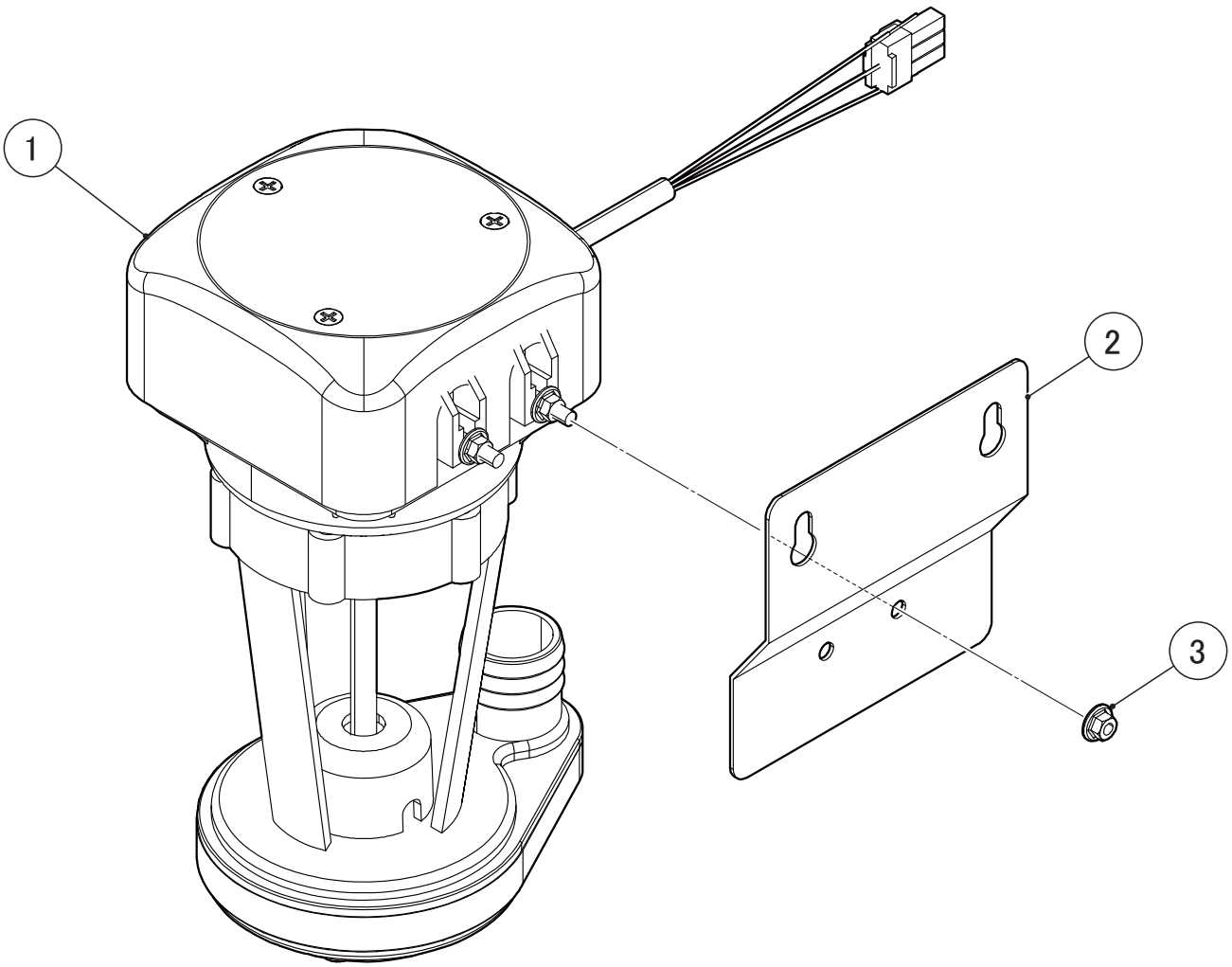
1
2
3

型号/Model: **SRM-140A**
SRM-175A

标题/TITLE: **K.循环水泵马达组件**
PUMP MOTOR ASSY

序号 INDEX NO.	部品名称 DESCRIPTION	材料或型号 MATERIAL OR MODEL NUMBER	部品序号 PART NUMBER	需求数量 REQ'D NUMBER			
				G-1 H-0	H-1 and later		
1	循环水泵马达 - 线束 HARNESS - PUMP MOTOR (G)		383047G01	1	1		
2	循环水泵马达支架 BRACKET - PM		481898M01	1	1		
3	螺母 NUT		P04092F01	2	2		

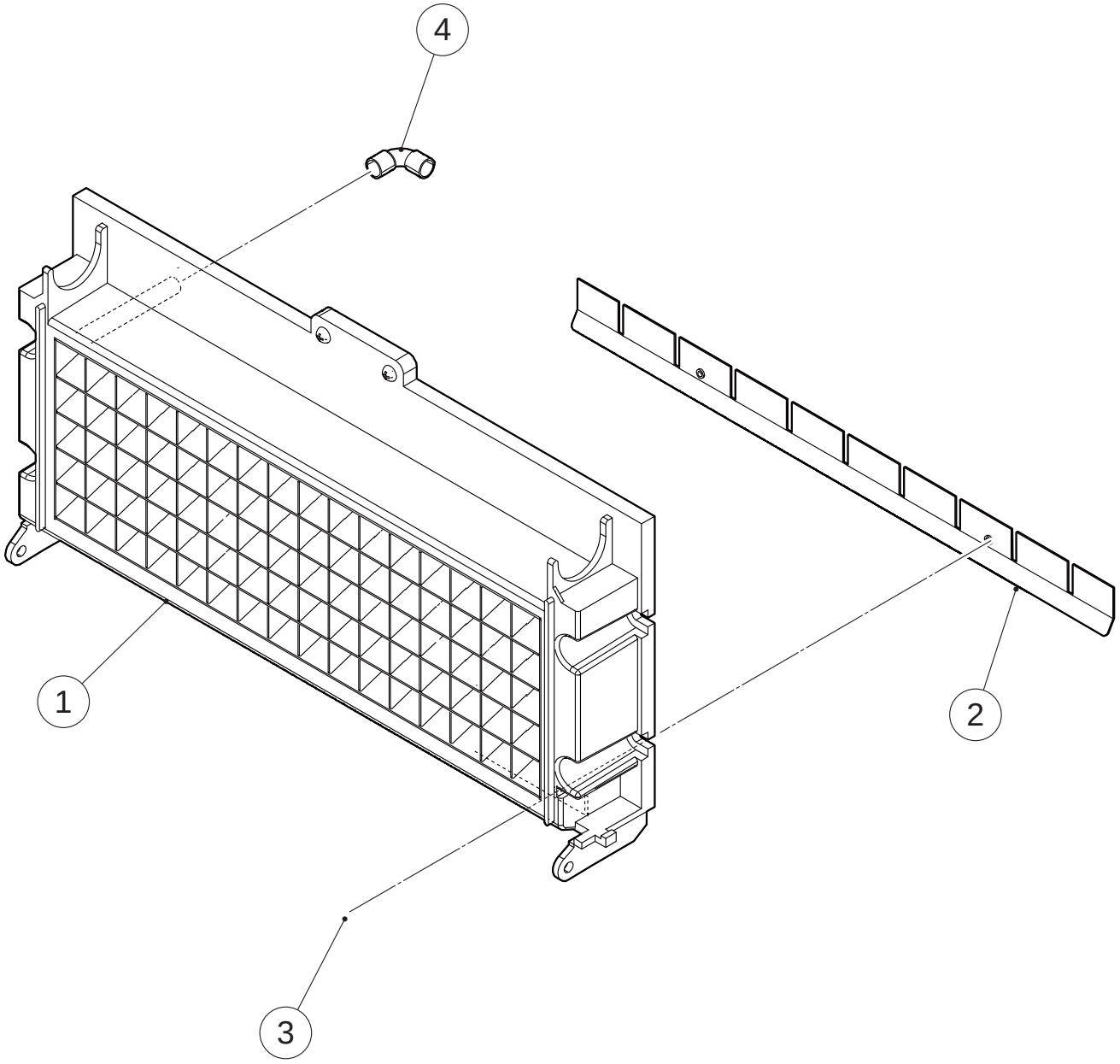
4
1
2
3

型号/Model: **SRM-140A/B**
SRM-175A/B
SRM-80A

标题/TITLE: **L.制冰板组件**
EVAP ASSY

序号 INDEX NO.	部品名称 DESCRIPTION	材料或型号 MATERIAL OR MODEL NUMBER	部品序号 PART NUMBER	需求数量 REQ'D NUMBER			
				G-1 H-0	H-1 and later		
1	制冰板 - 140 EVAP - 140		P04455-02	1	1		
2	制冰板 - 导流板 DEFLECTOR - EVAP		385035M01	1	1		
3	圆头细牙不锈钢螺丝 TRUSS HEAD SCREW		FST0408S0	2	2		
4	铜管弯头 - 制冰板 ELBOW - EVAP		P04552-01	2	2		

型号/Model: **SRM-60A** 标题/TITLE: **L.制冰板组件 EVAP ASSY**

序号 INDEX NO.	部品名称 DESCRIPTION	材料或型号 MATERIAL OR MODEL NUMBER	部品序号 PART NUMBER	需求数量 REQ'D NUMBER			
				G-1 H-0	H-1 R-0	R-1 and later	
1	制冰板 - 140 EVAP - 140		P04455-02	1	1	1	
		M079-C003	P04455-02	1	1	-	
			P04455-01	-	-	1	
2	制冰板 - 导流板 DEFLECTOR - EVAP		385035M01	1	1	1	
3	圆头细牙不锈钢螺丝 TRUSS HEAD SCREW		FST0408S0	2	2	2	
4	铜管弯头 - 制冰板 ELBOW - EVAP		P04552-01	2	2	2	

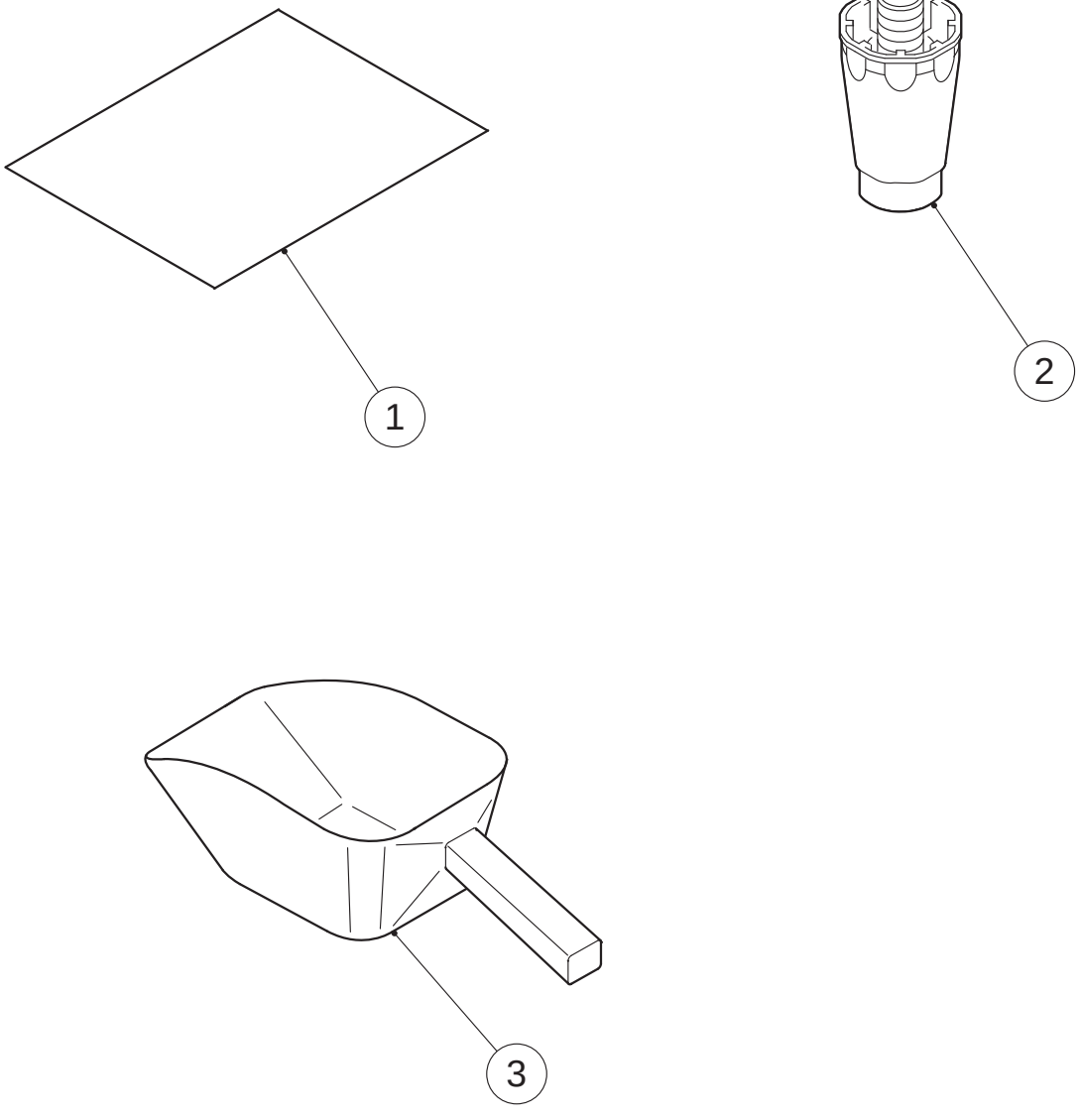
1
2
3

型号/Model: **SRM-140A**
SRM-175A

标题/TITLE: **Q.附件**
ACCESSORIES

序号 INDEX NO.	部品名称 DESCRIPTION	材料或型号 MATERIAL OR MODEL NUMBER	部品序号 PART NUMBER	需求数量 REQ'D NUMBER			
				G-1 H-0	H-1 and later		
1	说明书 INSTRUCTION MANUAL	M072, M073	L1M072304	1	1		
		M080, M079, M079-C004 M079-C007,M080-C007 M079-C003	L1M078101	-	1		
		M079-C001	L1M078403	-	1		
2	底脚 LEG	M072, M073	P00316-01	4	-		
			P04879-01	-	4		
		M080,M079,M079-C001 M079-C004,M079-C007 M080-C007,M079-C003	P04879-01	-	4		
3	冰铲 SCOOP		1H4123P02	1	1		