DATE	26.03.2026
REVISION NO	C
DOC. NO	KR03-5876

REACH-IN REFRIGERATOR

MODELS

HRV-128A

Table of Contents

1. PRODUCT NOMENCLATURE: 3
2. REFRIGERATOR ASSEMBLY 4
3. EVAPORATOR ASSEMBLY 6
4. EVAPORATOR MOTOR ASSEMBLY 7
5. CONDENSING UNIT 8
6. CONDENSER MOTOR ASSEMBLY 9
7. POWER BOX ASSEMBLY 10
8. CENTER PILLAR ASSY 11
9. HORIZONTAL FRAME ASSY 12
10. DOOR ASSEMBLY RT 13
11. DOOR ASSEMBLY LT 14
12. CANOPY ASSY 15
13. LABEL LOCATION 16
14. REVISION DETAILS: 17

1. PRODUCT NOMENCLATURE:

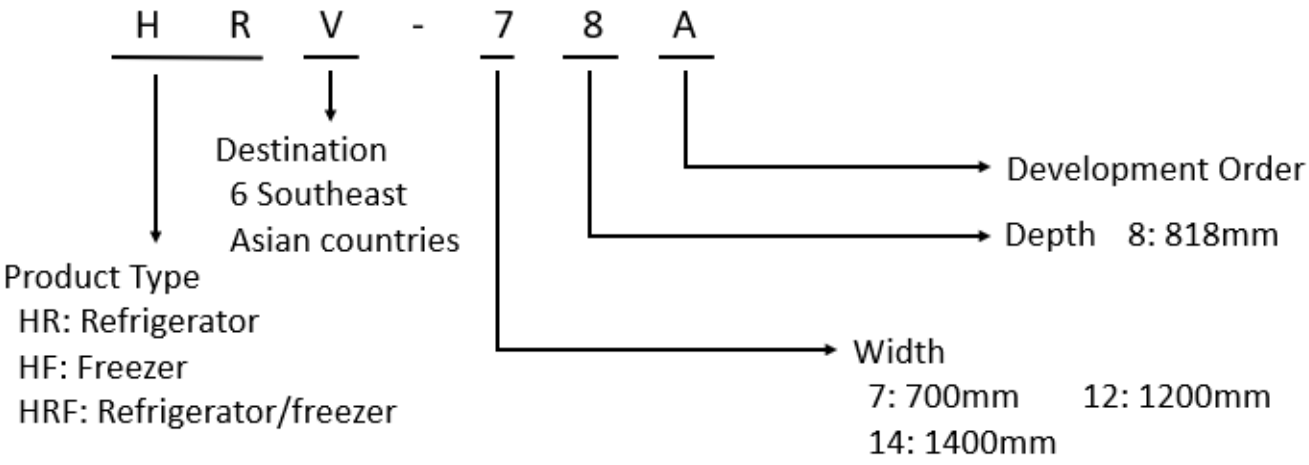

2. REFRIGERATOR ASSEMBLY

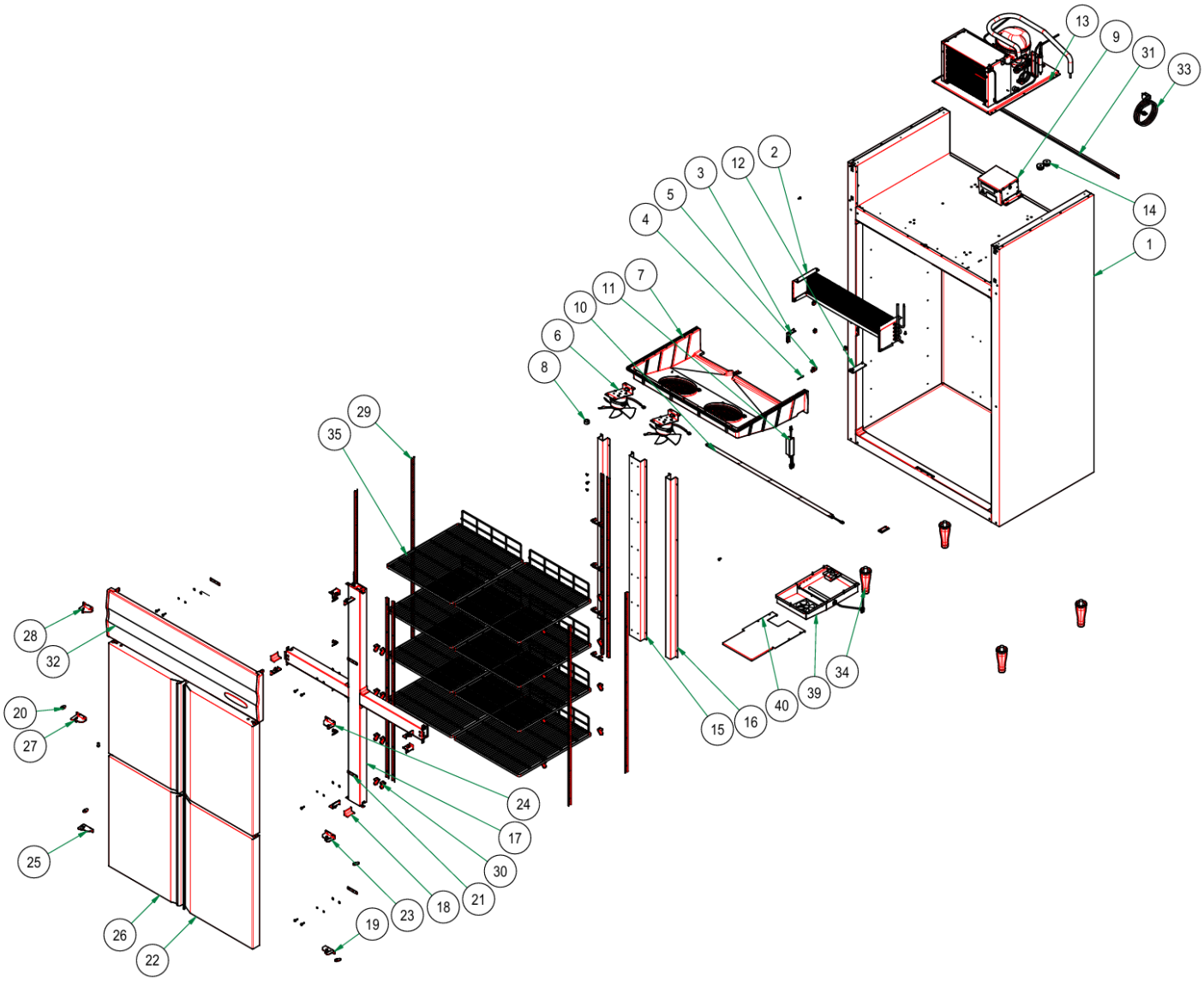

SR. NO.	SAP CODE	DRAWING NO	PART/ ASSEMBLY	DESCRIPTION	UOM	HRV-128A
1	0713480-01	0713480	PART	FOAMED CABINET ASSY	NOS	1
2	**1131544**	**0711478**	**ASSEMBLY**	**EVAPORATOR ASSY HRWH127/147**	**NOS**	**1**
3	1514594	0202684	PART	SENSOR HOLDING CLAMP	NOS	1
4	1530669	0601321	PART	SENSOR HARNESS	NOS	1
5	1519186	0222320	PART	SENSOR CLIP COIL	NOS	1
6	**-**	**0712382**	**ASSEMBLY**	**EVAPORATOR MOTOR ASSEMBLY**	**NOS**	**2**
7	**0711508**	**0711508**	**ASSEMBLY**	**DEW COLLECTOR ASSEMBLY**	**NOS**	**1**
8	1510163	0201310	PART	DRAIN GASKET VMQ SILICON	NOS	1
9	**1131548**	**0712185**	**ASSEMBLY**	**POWER BOX ASSEMBLY HRWH**	**NOS**	**1**
10	1510840	0600892	PART	PL LED BAR Y2835/7.5W 6500K/24V L1000MM	NOS	1
11	1530698	-	PART	LED DRIVER 8.5W WITH MOLEX	NOS	1
12	1111141	0115768	PART	LED CONNECTOR BOX COVER LT	NOS	1
13	**1131537**	**0711820**	**ASSEMBLY**	**CONDENSING UNIT ASSY**	**NOS**	**1**
14	1528449	0222824	PART	EVAPORATOR INLET-OUTLET PLUG	NOS	2
15	1132475	0121668	PART	SS430 REAR MID CHNL	NOS	1
16	1131728	0121383	PART	SS430 STOPER CHNL	NOS	2
17	**-**	**0702511**	**ASSEMBLY**	**CENTER PILLAR ASSY CHILLER**	**NOS**	**1**
18	1507657	0245637	PART	SUS INSIDE CORNER - 245637-02	NOS	8
19	1520365	0506808	PART	BOTTOM HINGE ASSEMBLY RT	NOS	1
20	1508146	0201703	PART	SUS PLASTIC HINGE COLLAR - HINGE	NOS	4
21	1508739	0201166	PART	SUS DOOR SPACER	NOS	12
22	**0713496-04**	**0713496**	**ASSEMBLY**	**DOOR ASSLY RT BTM**	**NOS**	**2**
23	1508029	0502998	PART	SUS MIDDLE HINGE RT	NOS	1
24	1508032	0506873	PART	TOP HINGE ASSEMBLY RT	NOS	1
25	1520364	0506809	PART	BOTTOM HINGE ASSEMBLY LT	NOS	1
26	**0713496-03**	**0713496**	**ASSEMBLY**	**DOOR ASSLY LT BTM**	**NOS**	**2**
27	1508028	0502998	PART	SUS MIDDLE HINGE LT	NOS	1
28	1508033	0506874	PART	TOP HINGE ASSEMBLY LT	NOS	1
29	1511531	0505442	PART	SHELF HOLDER RACK	NOS	8
30	1513377	0505879	PART	HSU SHELF CLIP	NOS	32
31	1112494	0116099	PART	CANOPY SUPPORT ANGLE	NOS	1
32	**1112507**	**0702503**	**ASSEMBLY**	**CANOPY ASSEMBLY**	**NOS**	**1**
33	1509756	-	PART	POWR CORD	NOS	1
34	1508307	-	PART	SUS LEG 150 MM 446733-01	NOS	4
35	1524212	0507078	PART	PNTD STRIP SHELF HRWH/HFWH 127	NOS	8
36	L1KR01103	-	PART	INSTRUCTION MANUAL	NOS	1
37	**1V0004A01**	**1V0004**	**ASSEMBLY**	**LABEL LOCATION**	**NOS**	**1**
38	1530610	0600807	PART	EMI FILTER 6A	NOS	1
39	1113604	0702681	PART	DRAIN PAN WITH FAN ASSY TYPE 3 LT	NOS	1
40	3V0009M01	3V0009	PART	TOP PANEL – EVAP PAN	NOS	1

3. EVAPORATOR ASSEMBLY

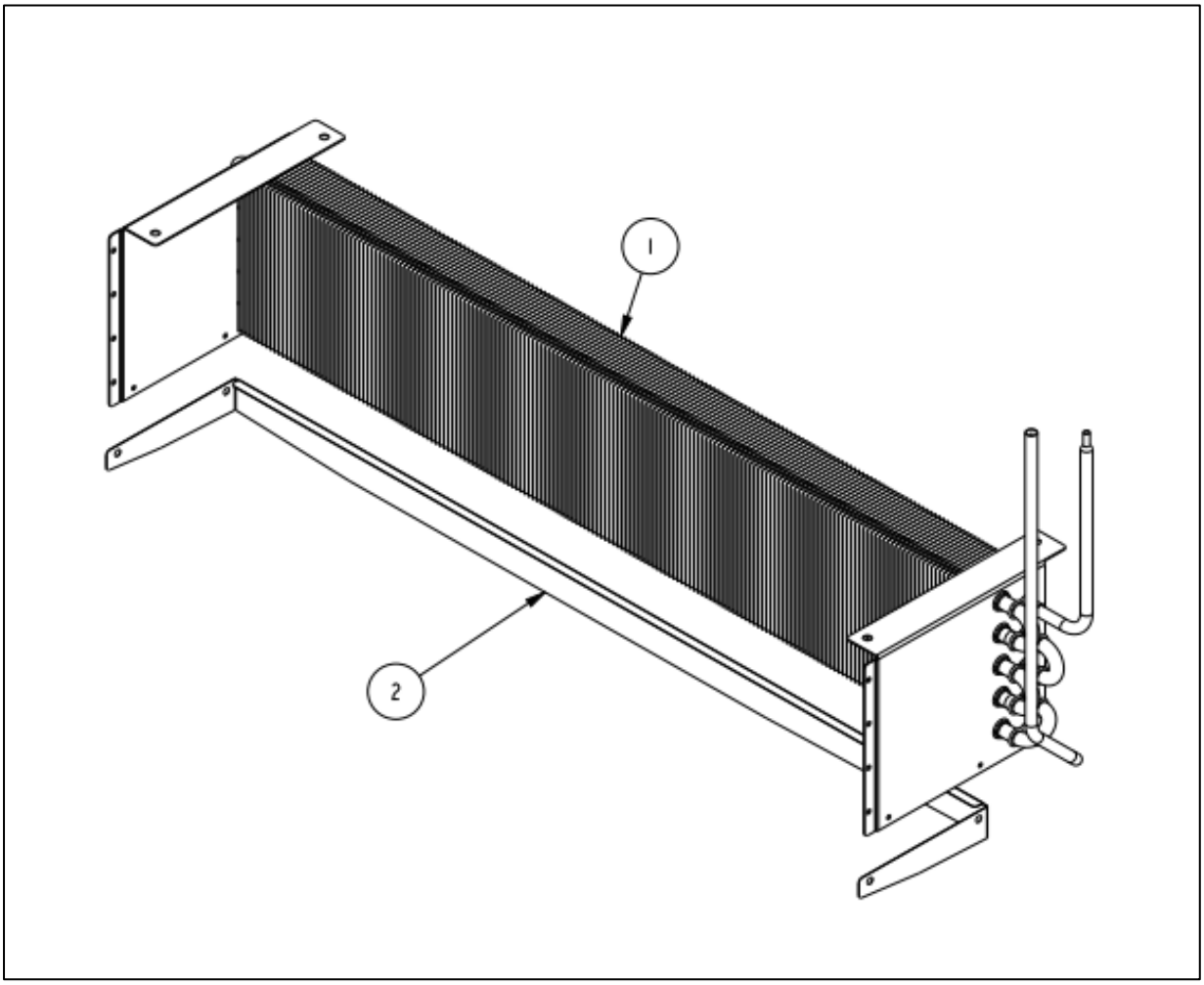

INDEX NO.	SAP CODE	DRAWING NO	PART/ ASSEMBLY	DESCRIPTION	UOM	HRV-128A
1	1129032	0507017	PART	EVAPORATOR	NOS	1
2	1131479	0121551	PART	COIL BLANKOFF	NOS	1
3	1502189	-	PART	SCREW T4 X 8 (T4) SUS	NOS	4

4. EVAPORATOR MOTOR ASSEMBLY

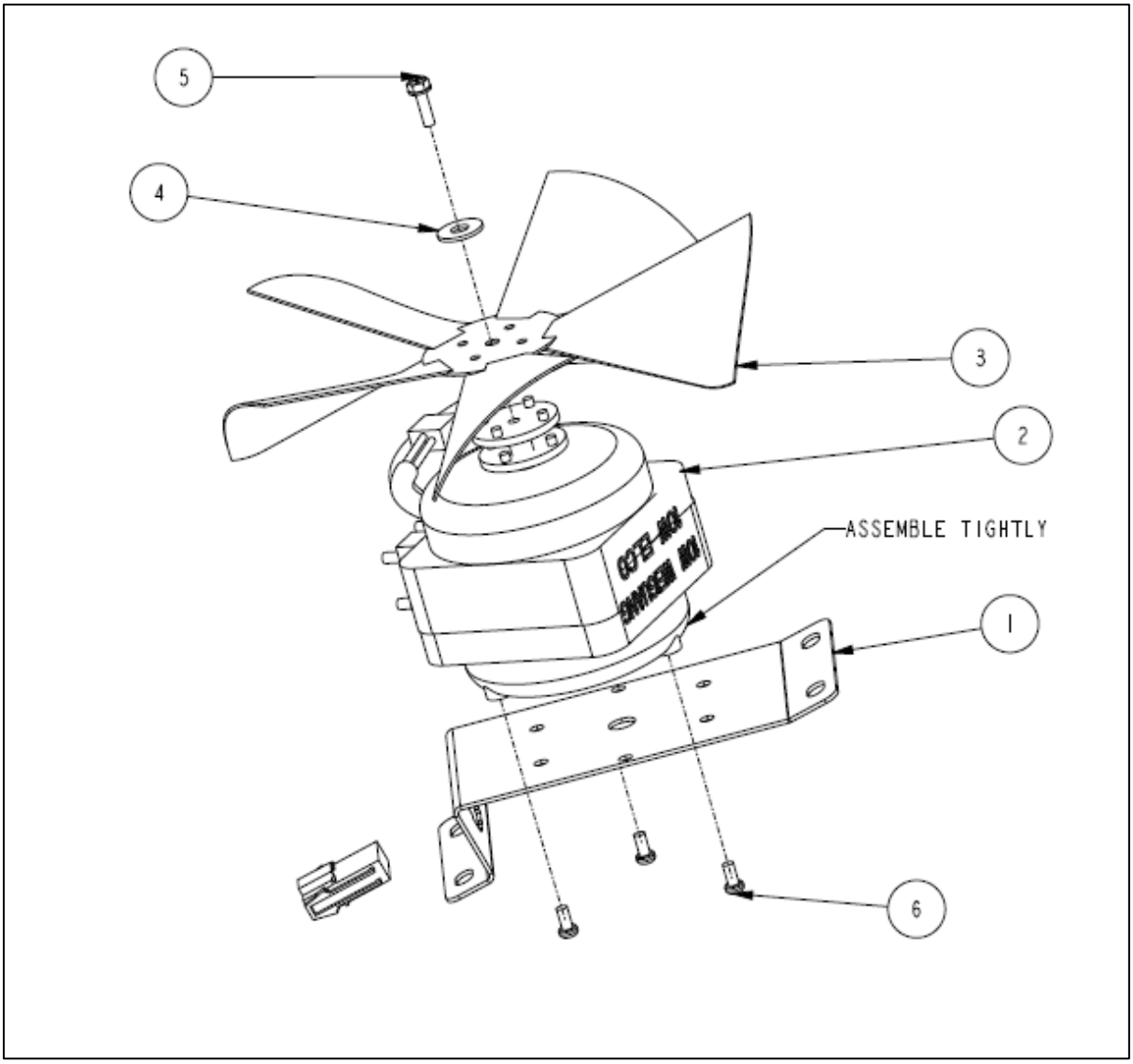

INDEX NO.	SAP CODE	DRAWING NO	PART/ ASSEMBLY	DESCRIPTION	UOM	HRV-128A
1	1119839	0118631	PART	EVAP MOTOR BKT	NOS	1
2	1141793	0601831	PART	MOTOR 5W	NOS	1
3	1500875	0300876	PART	IMPELLER -WRL 5 X 8" V 28 DEG	NOS	1
4	1502216	-	PART	WASHER W8 SUS	NOS	1
5	1506257	-	PART	SCREW M4 X 12 , HEX HD PHILIPS SLOT SUS	NOS	1
6	1512981	-	PART	SCREW STAR HEX HEAD M4X8 (T2) SUS	NOS	3

5. CONDENSING UNIT

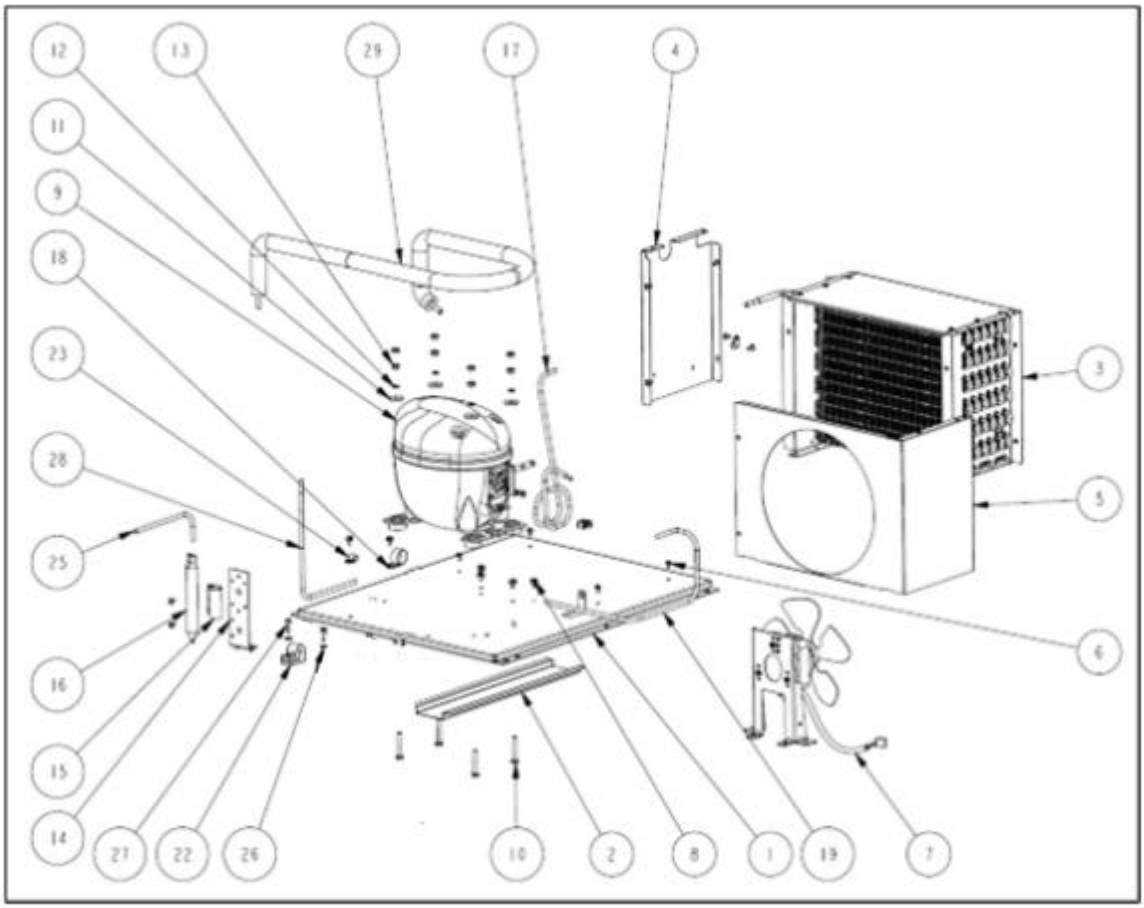

INDEX NO.	SAP CODE	DRAWING NO	PART/	DESCRIPTION	UOM	HRV-128A
1	1131484	0121511	PART	UNIT FRAME	NOS	1
2	1118404	0118426	PART	UNIT FRM SUPPORT	NOS	1
3	1509203	0502849	PART	MS CONDENSER	NOS	1
4	1107217	0114185	PART	COND COVER SIDE	NOS	1
5	1119775	0118773	PART	CONDENSER COVER	NOS	1
6	1508313	-	PART	SCREW TT TRUSSHEAD M4X8 SS FT20408F0	NOS	18
7	**3V0004A02**	**3V0004A02**	**ASSEMBLY**	**10W CONDENSER MOTOR ASSY**	**NOS**	**1**
8	1508312	-	PART	SCREW TAPTITE M4X8	NOS	7
9	1521398	-	PART	COMPRESSOR DONPER KK550WU1S R290	NOS	1
10	1506255	-	PART	HEX SUS BOLT M6 x 40 MM	NOS	4
11	1502212	-	PART	WASHER FOR COMPRESSOR SIZE:6.5X23 X 2 MM	NOS	4
12	1502199	-	PART	SPRING WASHER M6	NOS	4
13	1502092	-	PART	NUT M6	NOS	8
14	1518964	0113675	PART	DRIER STAND	NOS	1
15	1518963	0113981	PART	DRIER FIXING CLAMP BIG	NOS	1
16	1523754	0401547	PART	DRIER 15GM	NOS	1
17	1142029	0401624	PART	DISCHARGE LINE	NOS	1
18	1505109	-	PART	CORD FIXTURE ADJUSTABLE V SIZE -1 INCH	NOS	1
19	1142032	0401625	PART	COMPRESSOR CHARGING PIPE	NOS	1
22	1506586	0200997	PART	CO2 VIBRATION RUBBER PAD SILICON RED	NOS	1
23	1504667	-	PART	CORD FIXTURE V SMALL	NOS	2
25	1142033	0401626	PART	CHARGING PIPE DRIER HFWH77	NOS	1
26	1502215	-	PART	WASHER W6 SUS	NOS	1
27	1506950	-	PART	SCREW T4 X 20 (T4) MZN	NOS	1
28	1142030	0401627	PART	INLET PIPE DRIER	NOS	1
29	1141804	0401628	PART	SUCTION PIPE	NOS	1
30	1123504	0601475	PART	COMPRESSOR HARNESS	NOS	1

6. CONDENSER MOTOR ASSEMBLY

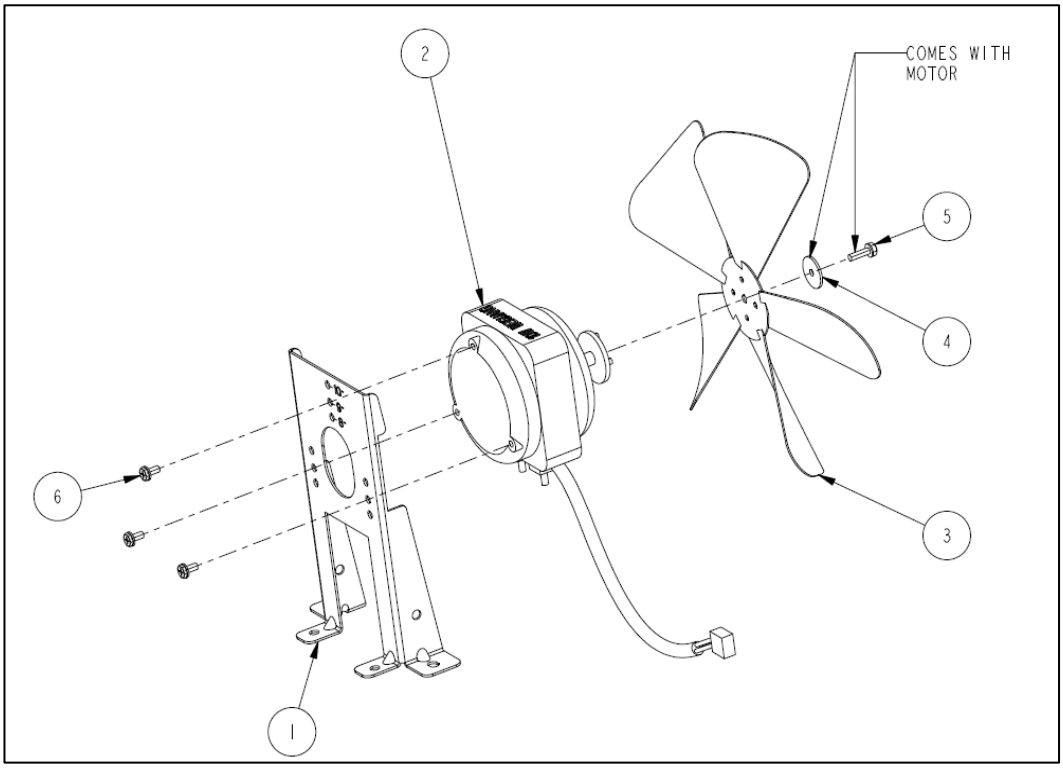

INDEX NO.	SAP CODE	DRAWING NO	PART/ ASSEMBLY	DESCRIPTION	UOM	HRV-128A
1	1523069	0108472	PART	CONDENSOR MTR BKT	NOS	1
2	1142021	0601840	PART	MOTOR 10W	NOS	1
3	1500879	0300876	PART	IMPELLER-WRL 5 X 9" V 28 DEG	NOS	1
4	-	-	PART	WASHER FOR MOTOR (COMES WITH MOTOR)	NOS	1
5	-	-	PART	MOTOR SCREW (COMES WITH MOTOR)	NOS	1
6	1512981	-	PART	SCREW STAR HEX HEAD M4X8 (T2) SUS	NOS	3

7. POWER BOX ASSEMBLY

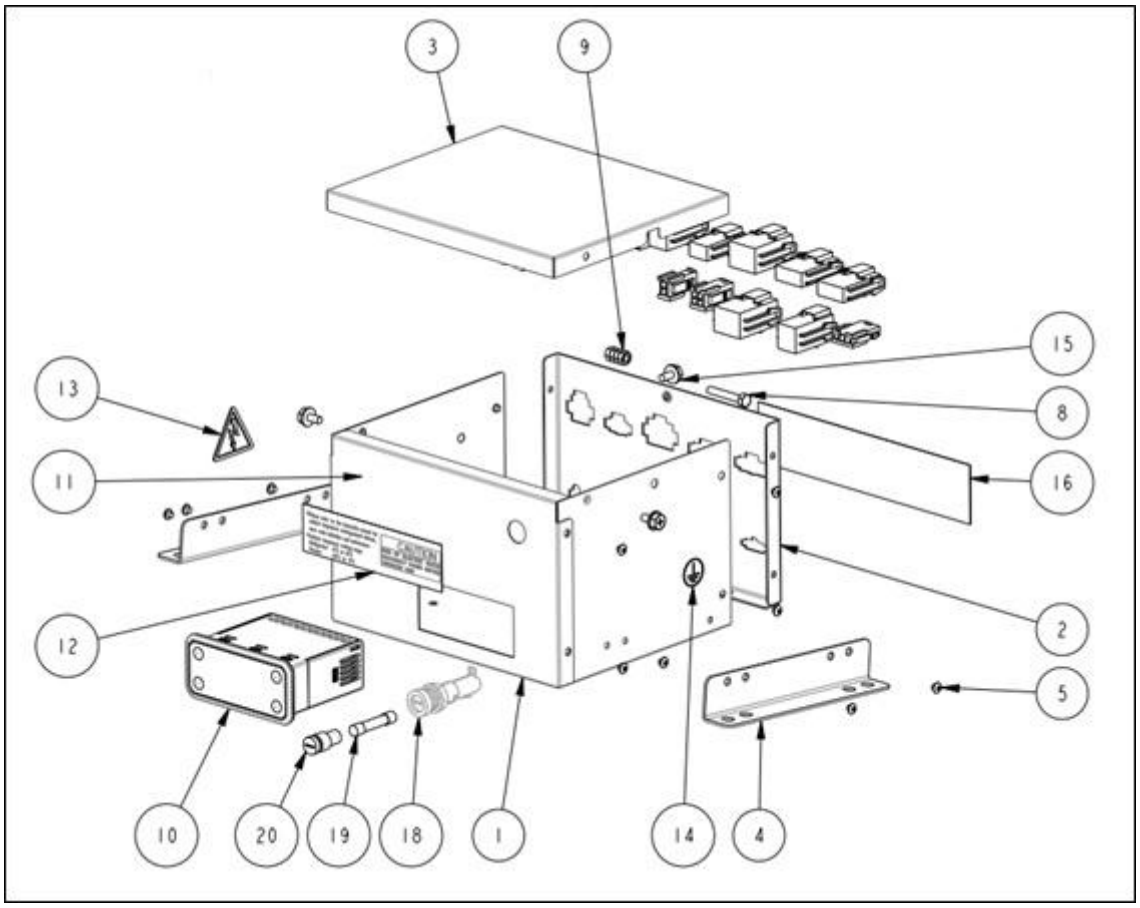

INDEX NO.	SAP CODE	DRAWING NO	PART/ ASSEMBLY	DESCRIPTION	UOM	HRV-78A
1	1131729	0121639	PART	POWER BOX BASE	NOS	1
2	1125556	0120221	PART	POWER BOX BCK PLATE	NOS	1
3	1107293	0116037	PART	POWER BOX COVER	NOS	1
4	1521526	0114475	PART	POWER BOX LEG	NOS	2
5	1507963	-	PART	POP RIVET SS-304 1/8" X 5/16"	NOS	16
6	1530899	0601750	PART	POWER BOX HARNESS HRWH	NOS	1
7	1530612	0601322	PART	SENSOR CONNECTING HARNESS	NOS	1
8	1502067	-	PART	BOLT EARTHING M4X25-BRASS	NOS	1
9	1502088	-	PART	NUT M4 EARTHING - BRASS	NOS	5
10	1517760	-	PART	TEMP. CONTROLLER	NOS	1
11	1502192	-	PART	SCREW T5X15 (T4) MZN	NOS	2
12	1602339	0505849	PART	SUS CONTROL BOX CAUTION STIKCER	NOS	1
13	1510405	0502436	PART	CAUTION STICKER HIGH VOLTAGE	NOS	1
14	1510404	0502251	PART	CAUTION STICKER EARTHING	NOS	1
15	1508312	-	PART	SCREW TAPTITE M4X8	NOS	3
16	1603386	1001203	PART	POWER BOX CONNECTOR LABEL	NOS	1
18	1510504	-	PART	FUSE SOCKET, 0031.1693.SI, IP40	NOS	1
19	1510503	-	PART	FUSE 10A, 8020.5021.G.SI	NOS	1
20	1510505	-	PART	FUSE CARRIER, 0031.1666.SI, IP40	NOS	1

8. CENTER PILLAR ASSY

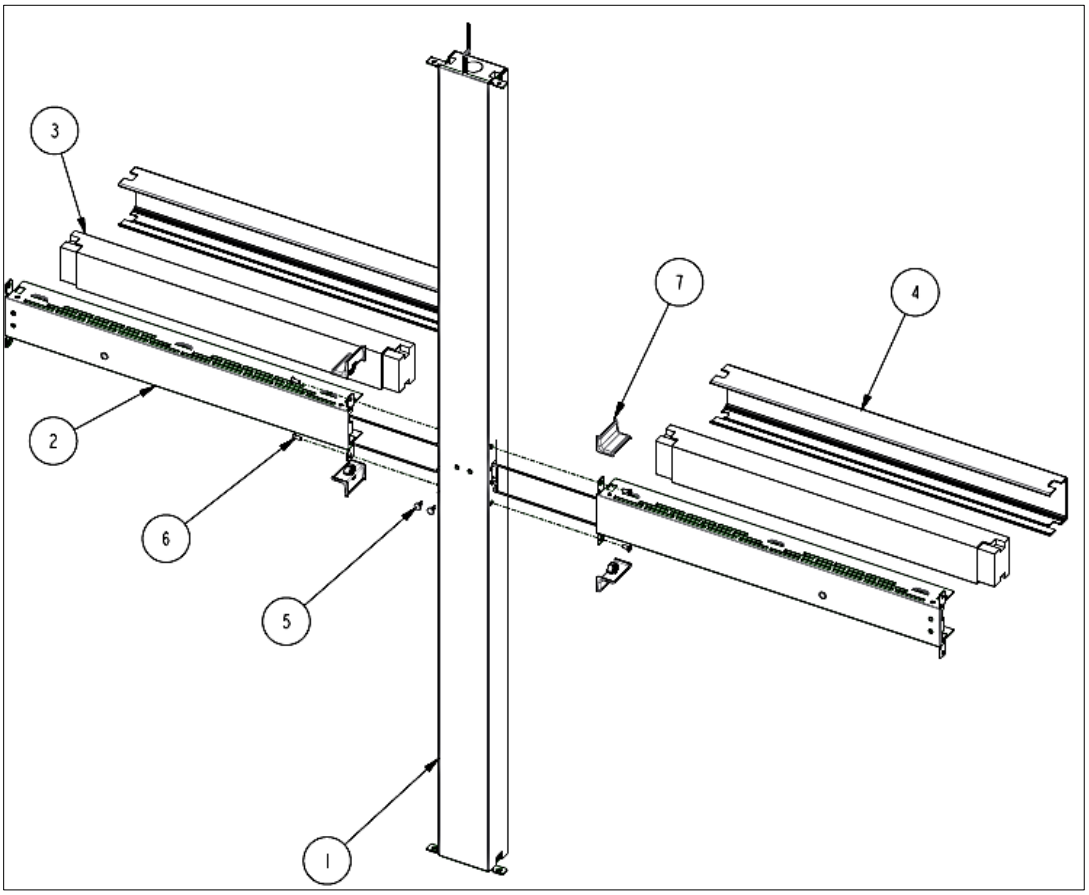

INDEX NO.	SAP CODE	DRAWING NO	PART/ ASSEMBLY	DESCRIPTION	UOM	HRV-128A
1	1113714	0702509	PART	FOAMED VERTICAL CENTER PILLER	NOS	1
2	-	**0702510**	**ASSEMBLY**	**HORIZONTAL FRAME ASSY**	**NOS**	**2**
3	1602074	0505679	PART	EPS CENTER PILLER 4D	NOS	2
4	1122643	0201561	PART	CENTER PILLAR PLASTIC EXTRUSION	NOS	2
5	1508306	0201136	PART	SUS HOLE PLUG	NOS	4
6	1503231	-	PART	M5 X 12 SCREW COUNTER SHANK	NOS	4
7	1507657	0245637	PART	SUS INSIDE CORNER - 245637-02	NOS	4

9. HORIZONTAL FRAME ASSY

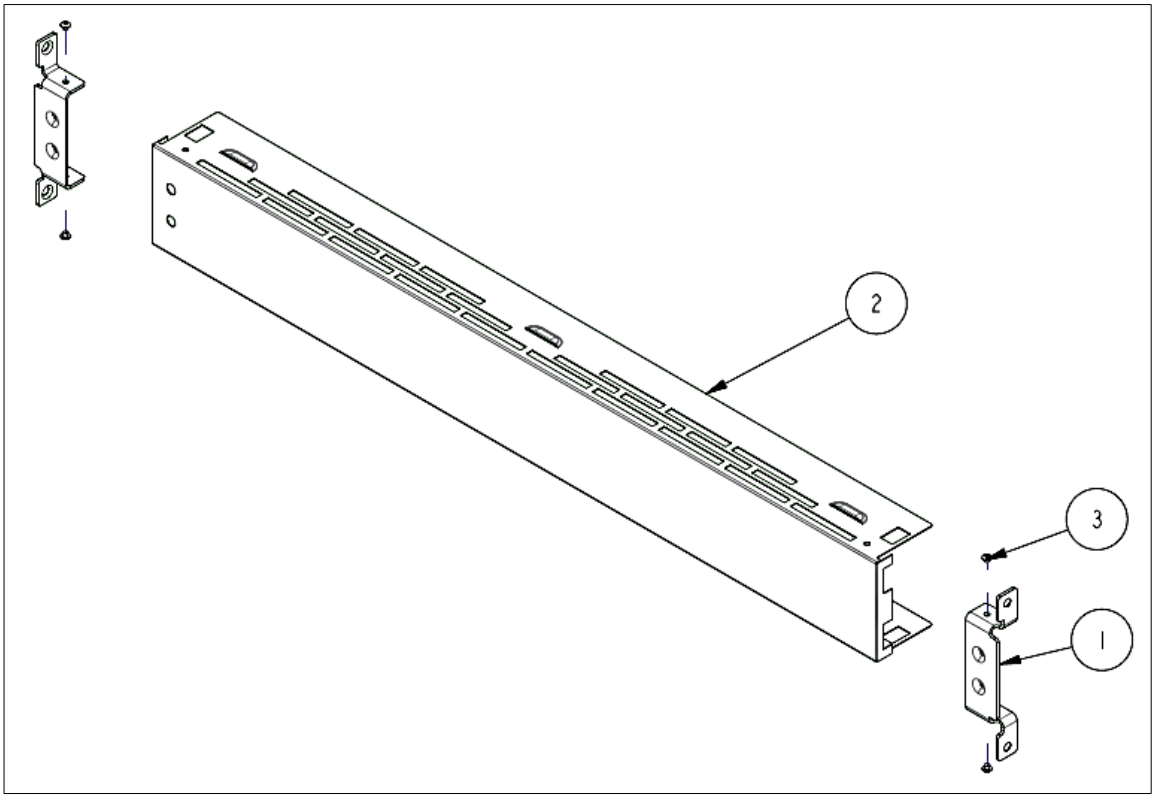

INDEX NO.	SAP CODE	DRAWING NO	PART/ ASSEMBLY	DESCRIPTION	UOM	HRV-128A
1	1507679	0114112	PART	CENTER PILLER NUT PLATE	NOS	2
2	1112480	0116191	PART	SS430 HORZ FRM HRW/HFW-127_116191	NOS	1
3	1507963	-	PART	POP RIVIT SS-304 1/8" X 5/16"	NOS	4

10. DOOR ASSEMBLY RT

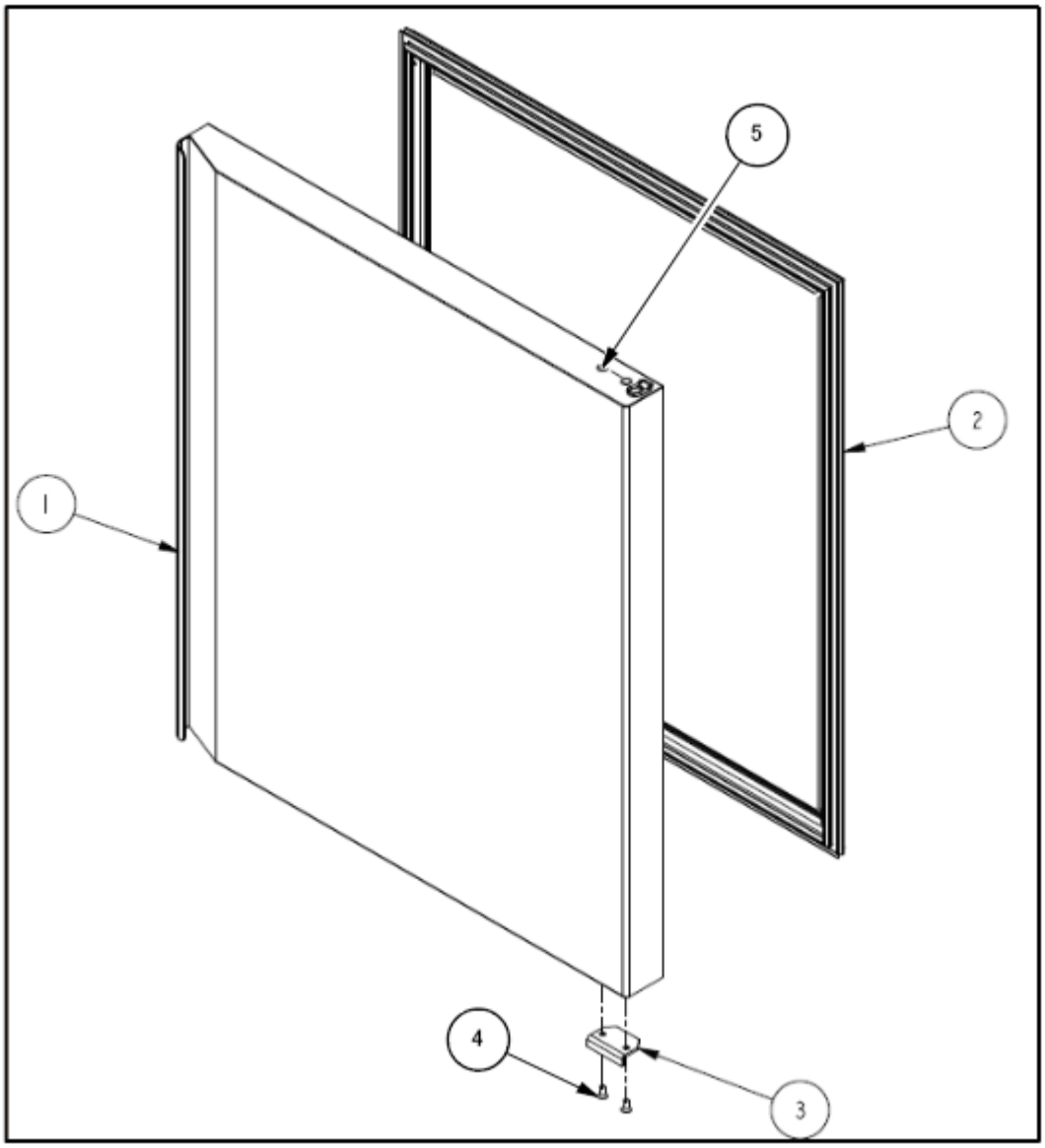

INDEX NO.	SAP CODE	DRAWING NO	PART/ ASSEMBLY	DESCRIPTION	UOM	HRV-128A
1	0713176-04	0713176	PART	FOAMED DOOR BOTTOM RT	NOS	1
2	1514302	0201562	PART	SUS GASKET 705x506	NOS	1
3	1514112	0117246	PART	NEW DOOR STOPPER	NOS	1
4	1503637	-	PART	SCREW M5 X 12	NOS	2
5	1508306	0201136	PART	SUS HOLE PLUG GREY	NOS	2

11. DOOR ASSEMBLY LT

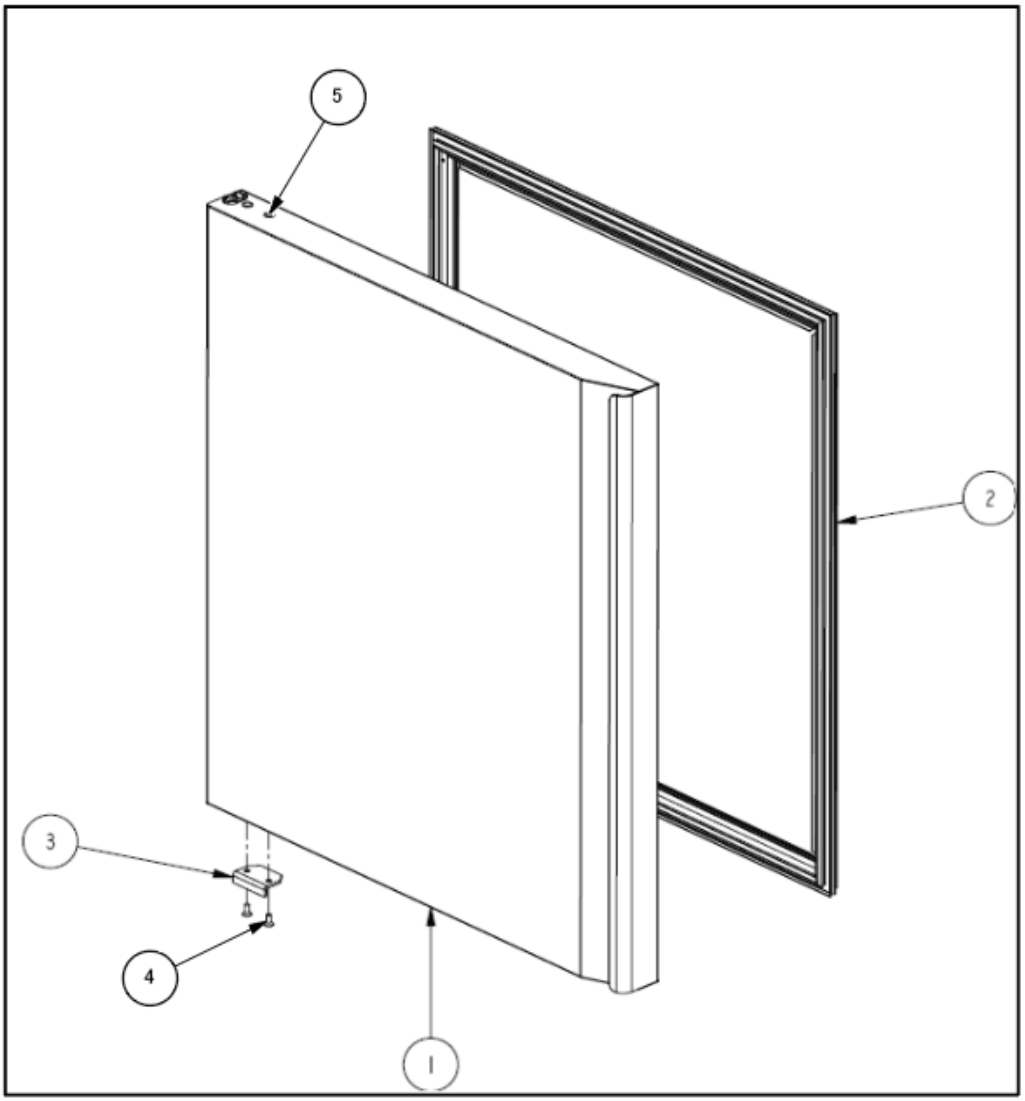

INDEX NO.	SAP CODE	DRAWING NO	PART/ ASSEMBLY	DESCRIPTION	UOM	HRV-128A
1	0713176-03	0713176	PART	FOAMED DOOR BOTTOM LT	NOS	1
2	1514302	0201562	PART	SUS GASKET 705x506	NOS	1
3	1514112	0117246	PART	NEW DOOR STOPPER	NOS	1
4	1503637	-	PART	SCREW M5 X 12	NOS	2
5	1508306	0201136	PART	SUS HOLE PLUG GREY	NOS	2

12. CANOPY ASSY

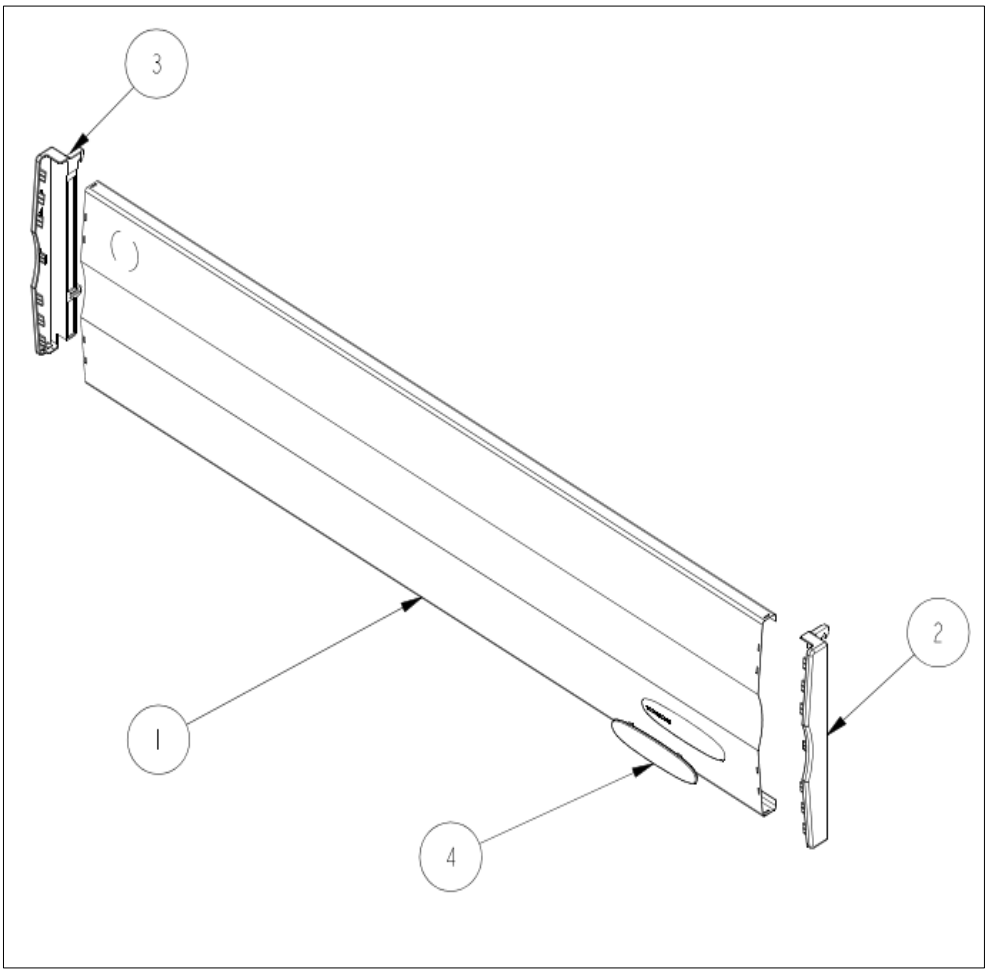

INDEX NO.	SAP CODE	DRAWING NO	PART/ ASSEMBLY	DESCRIPTION	UOM	HRV-128A
1	1112493	0119493	PART	CANOPY PANEL	NOS	1
2	1517042	0202001	PART	SUS PLASTIC CORNER-FRONT PANEL(R)	NOS	1
3	1517043	0202002	PART	SUS PLASTIC CORNER-FRONT PANEL(L)	NOS	1
4	1508081	0201743	PART	WINDOW PANEL	NOS	1

13. LABEL LOCATION

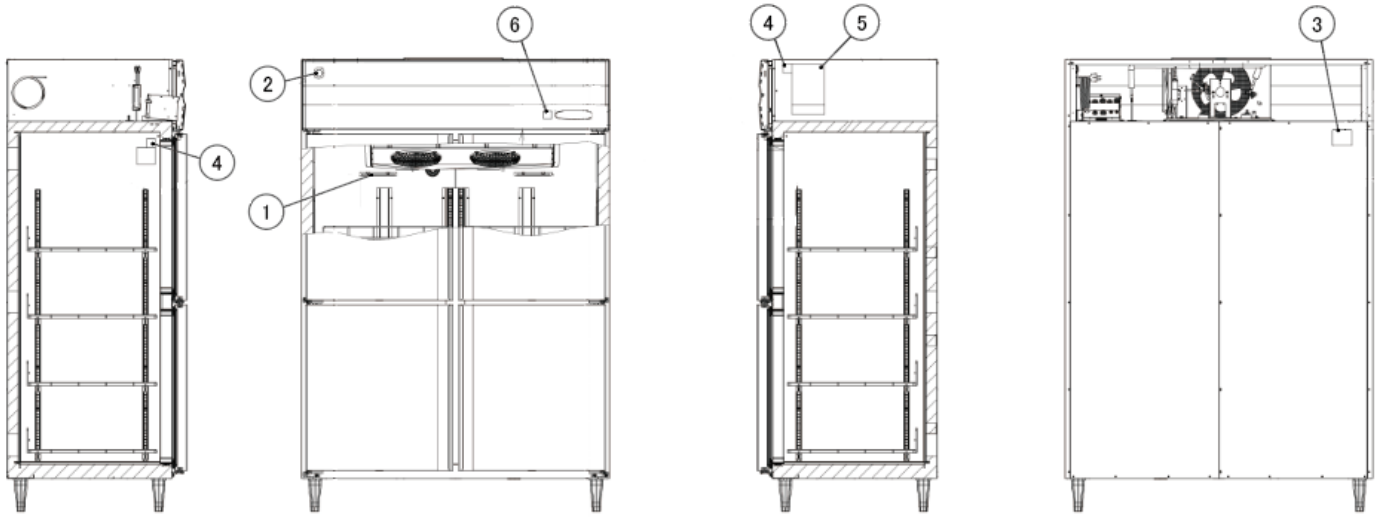

INDEX NO.	SAP CODE	DRAWING NO	PART/ ASSEMBLY	DESCRIPTION	UOM	HRV-128A
1	1603534	0506840	PART	LOAD LIMIT STICKER	NOS	2
2	1510782	0505553	PART	5 STAR DOME PENGUIN	NOS	1
3	3J3551L01	3J3551	PART	CAUTION LABEL / R290 R600	NOS	1
4	1602762	0506145	PART	R 290 STICKER VINYLE	NOS	2
5	3V0020L01	3V0021	PART	WIRING LABEL	NOS	1
6	493430L01	493430	PART	LABEL - HACCP	NOS	1

14. REVISION DETAILS:

REVISION	REVISION DETAIL	DATE
A	（First edition）	2025.12.25
B	Change & Delete Parts Code P5:No.4,11,36,37,38, P8:No.7, P10:No.6,7, P11:No.1, P12:No.6,7, Add Page 16: 13. LABEL LOCATION	2026.02.28
C	Add component and change figure P4: Change figure with component added P5: Add row 40. TOP PANEL – EVAP PAN	2026.03.26