HOSHIZAKI

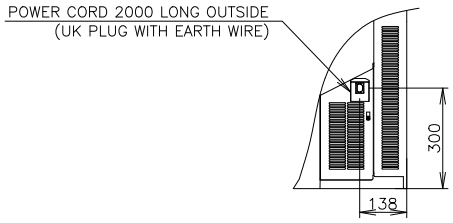

VIEW A(1/10)

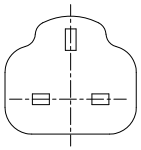

UK PLUG

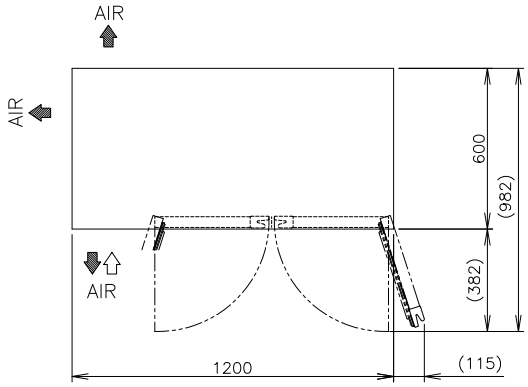

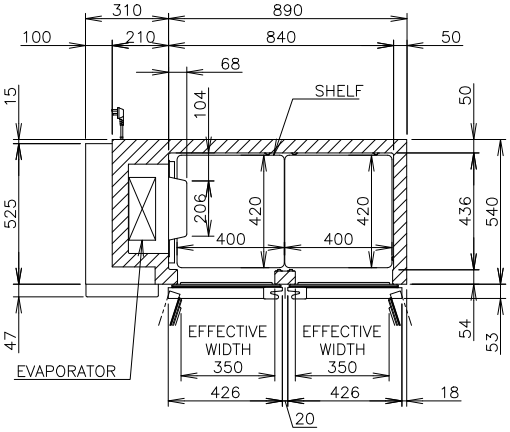

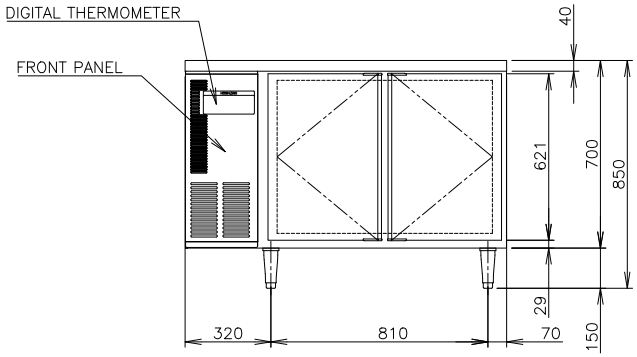

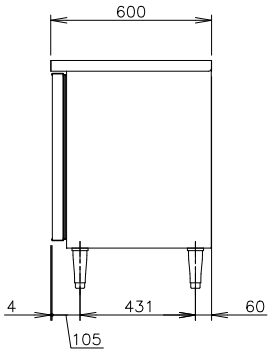

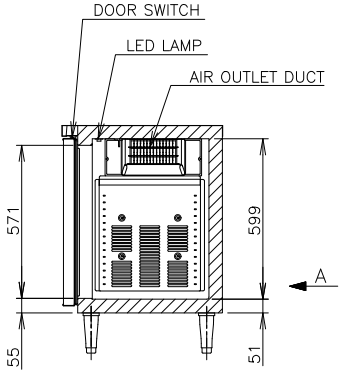

ITEM	Hoshizaki Undercounter Freezer
MODEL	FT−126MC−S
POWER SUPPLY	1 Phase 220−240V~ 50Hz Capacity: 0.63kVA (2.90A)
AMPERAGE	Rated 1.5A
ELECTRIC CONSUMPTION	Motor 194W(Power Factor 79%)Heater 230W Refrigeration 234W Defrost 190W
HEAT REJECTION	541W
POWER CORD	2.0m (UK Plug with Earth Wire)
EFFECTIVE CAPACITY	Net:156.2L/Gross:234L (Based on ISO 22041−2019)
ENERGY CONSUMPTION	5.13kWh/day (Based on ISO 22041−2019)
OUTSIDE DIMENSIONS	1200 (W) x 600 (D) x 850 (−880)mm (H)
INSIDE DIMENSIONS	840mm (W) x 436mm (D) x 599mm (H)
EXTERIOR	Stainless Steel, Galvanized Steel (Rear/Bottom) ABS Plastic (Top & Bottom on Door)
INTERIOR	Stainless Steel, ABS Plastic (Door)
INSULATION	Polyurethane Foam
INSULATION FOAM BLOWING AGENT	Cyclopentane
REFRIGERATION SYSTEM	Forced Air Circulation
DEFROST SYSTEM	Glass Tube Heater
COMPRESSOR	Hermetic
CONDENSER	Fin and Tube type, Air−cooled
EVAPORATOR	Fin and Tube Type
REFRIGERANT	R290
TEMPERATURE CONTROL	Microprocessor controlled Adjustable from −25 to −7℃
DEFROST CONTROL	Microprocessor controlled
ELECTRIC CIRCUIT PROTECTION	Fuse, Earth Wire
COMPRESSOR PROTECTION	Motor Protector
LEG	Plastic Adjustable 150 to 180mm
SHELF	4pcs.
WEIGHT	Net: 69kg (Gross: Approx. 81kg)
PACKAGE	Carton 1265mm (W) x 680mm (D) x 845mm (H)
ACCESSORIES	−
OPERATING CONDITIONS	Ambient Temperature: 5−38℃ Voltage Range: Rated Voltage±6%

*We reserve the right to make changes in specifications and design without prior notice.

1. Install the product properly in accordance with the instructions on location, electrical connections stated in the instruction manual provided.
   Allow 10mm extra space at the installation site to meet any installation requirements (additional spacing is also required for proper air flow and pipe connections).
2. The heat rejection is based on the reached pulldown temperature at ambient temperature of 35℃ and power supply of 230V 50Hz.
   The amperage and electric consumption are based on measurements at ambient temperature of 38℃ and power supply of 230V 50Hz.
3. The cabinet temperature range of −25 to −7℃ is guaranteed at ambient temperature of 30℃.
4. Product code: T439−V060

HOSHIZAKI UNDERCOUNTER FREEZER FT−126MC−S

APPROVED	CHECKED	DESIGNED	DRAWN	SCALE	
LIANGK	ZHOU	LXF	LXF	1/20	TRIGONOMETRY
LIANG / APPROVED	LY / DESIGNED	1 / SYMBOL	2025.11.21 / DATE	DATE 2025.09.16	DRAWING NO. D43390 / SYMBOL 1